WAVE

BAFFLE

CEILING

Wave is vertically installed units. It is avalible in different sizes and a wide range of colors. Two hanging methods: free hanging of each of the waves using a connector profile that maintains a uniform hanging. It is being sold as 4 part module that can be looped.

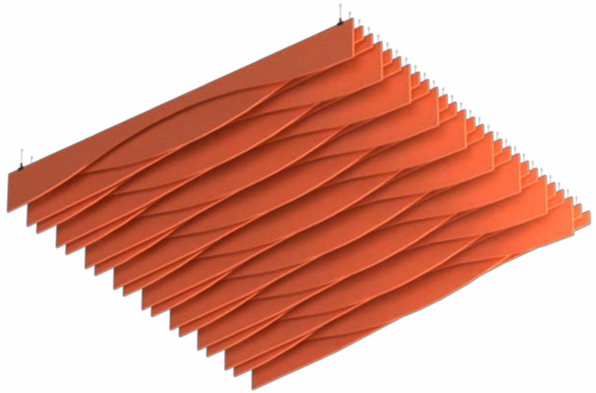

INSTALLATION

Unfiformed Hanging

Free Hanging

THICKNESS

12mm (0.47")

24mm (0.94")

LENGTH

2780mm (109.45")

2400mm (94.49")

HEIGHT

100-300mm (3.94"-11.81")

150-250mm (5.91"-9.84")

200-400mm (7.87"-15.75")

MOQ

8 Units in a single color

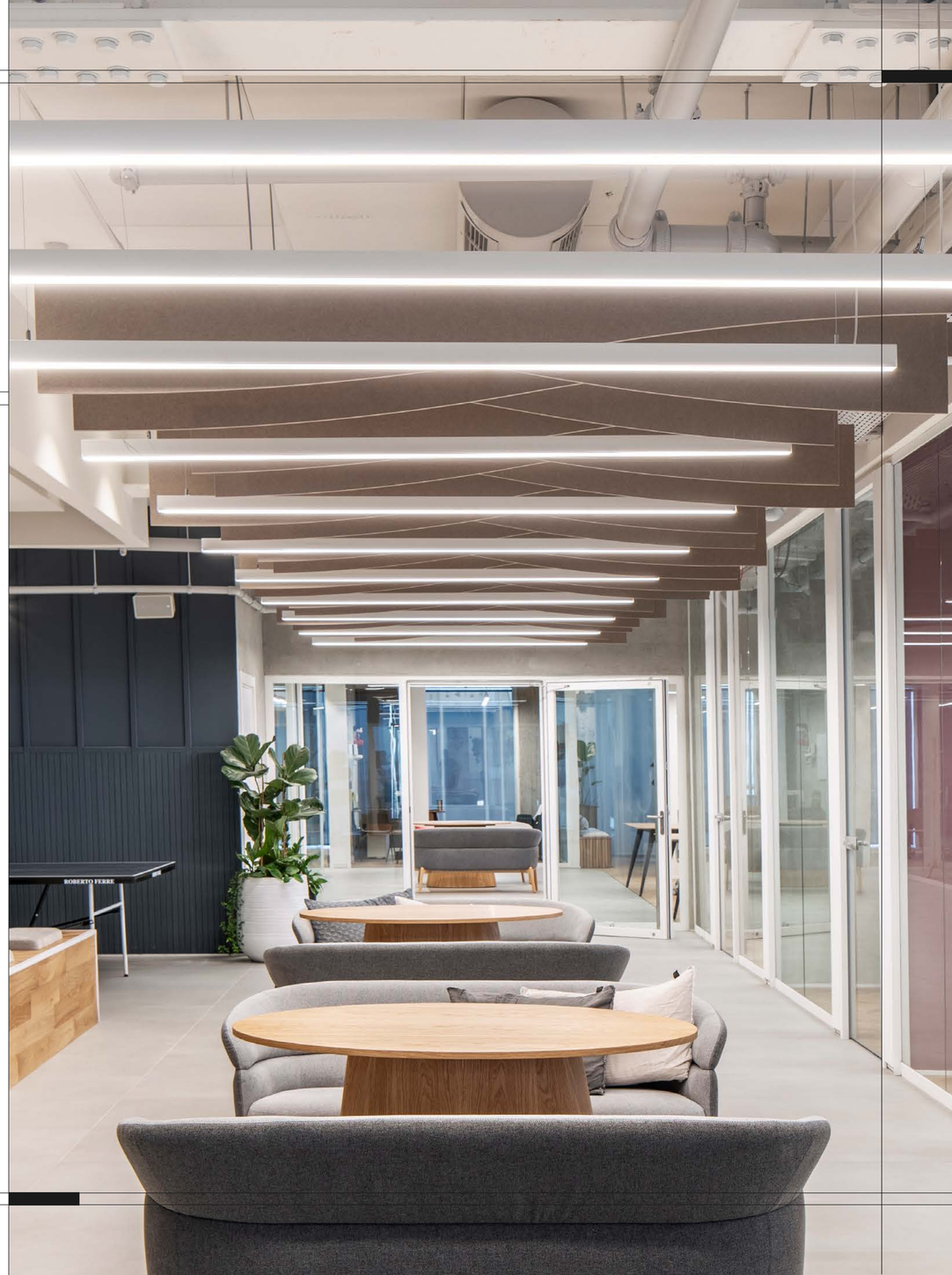

HOW TO PLACE AN ORDER

Wave offers versatile possibilities for shaping your space. As you plan your layout, take a moment to reflect on a few guiding questions to help refine your design.

Please note that the tiles cannot be cut, so the ceiling must be planned using full tiles only. Accurate planning will ensure a seamless and visually pleasing result.

minimum order quantities :
8 Units in a single color



Choose your preferred models

PAGE 3



Choose your desired color from our color palette – printing option available

PAGE 5



Ensure the ceiling dimensions meet the required specifications

PAGE 6

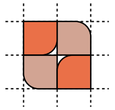

Select the internal layout according to the available options

PAGE 8

GEOMETRIC

MODELS

MODEL A



MODEL B

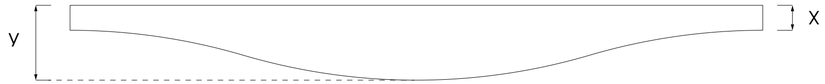

MODEL C

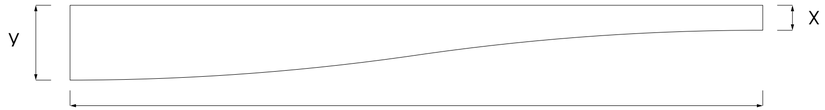

2780mm | 2400mm
(109.45") | (94.49")

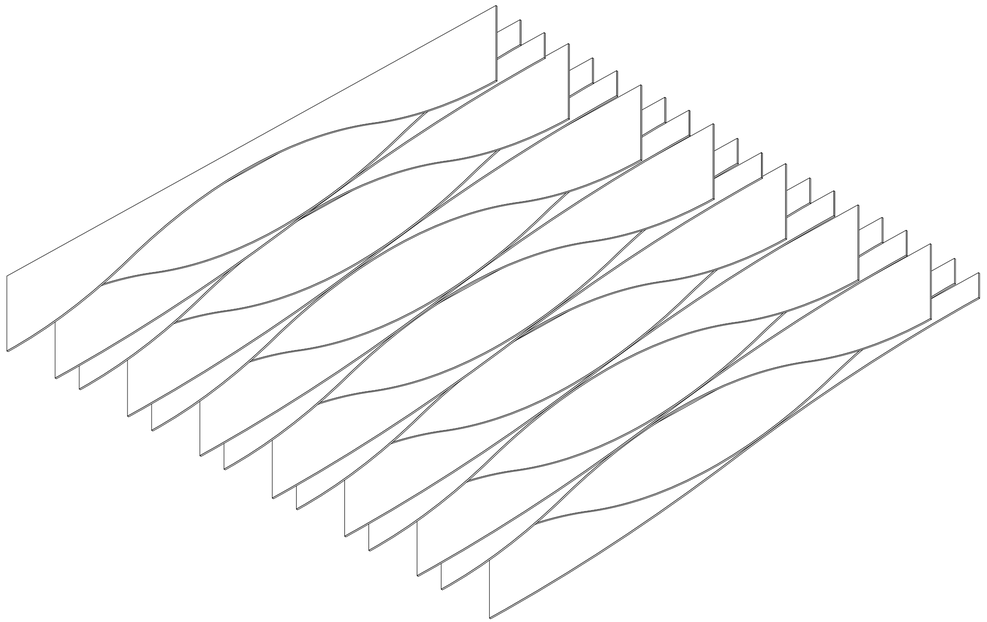

MODELS HIGHT VARIATION X/Y

100-300mm (3.94"-11.81")

150-250mm (5.91"-9.84")

200-400mm (7.87"-15.75")

COLORS

echoshape panels are crafted from 12mm PET felt, serving as the core material in our acoustic solutions. Available in a curated range of colors, these panels are designed to enhance both the visual and acoustic qualities of any space.

Choose from subtle neutrals for a seamless look, or introduce bold tones to create striking contrasts. Due to the nature of the PET felt manufacturing process, a soft heathered texture may appear, blending multiple shades within each panel. As a result, slight color variations between units are natural and reflect the sustainable, recycled origin of the material.

Please note: colors may appear differently on screens or in print. For accurate color matching, we recommend requesting a physical sample.

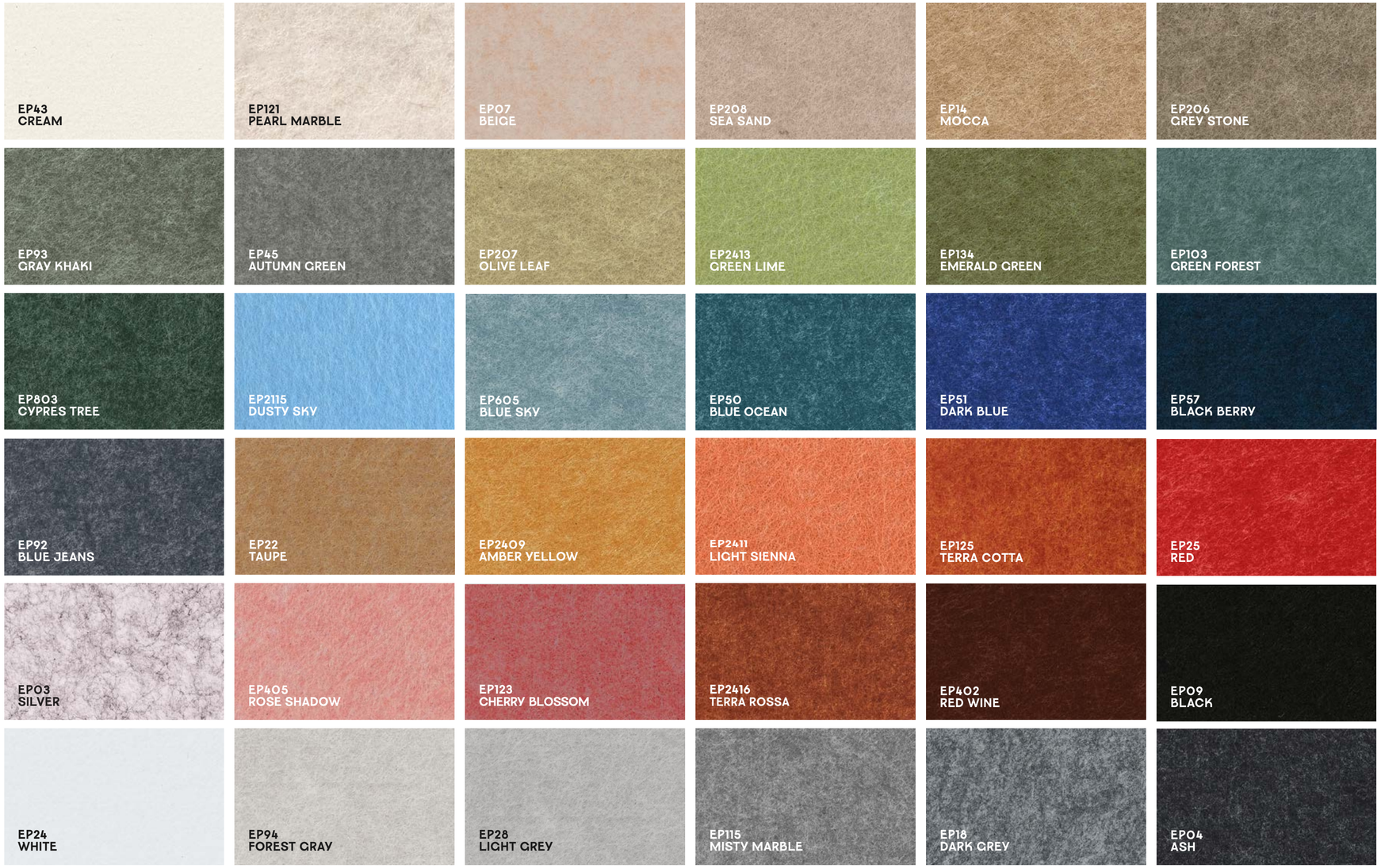

PRINTED PATTERNS

echoshape panels are crafted from 12mm PET felt, serving as the core material in our acoustic solutions. Available in a curated range of colors, these panels are designed to enhance both the visual and acoustic qualities of any space.

Choose from subtle neutrals for a seamless look, or introduce bold tones to create striking contrasts. Due to the nature of the PET felt manufacturing process, a soft heathered texture may appear, blending multiple shades within each panel. As a result, slight color variations between units are natural and reflect the sustainable, recycled origin of the material.

Please note: colors may appear differently on screens or in print. For accurate color matching, we recommend requesting a physical sample.



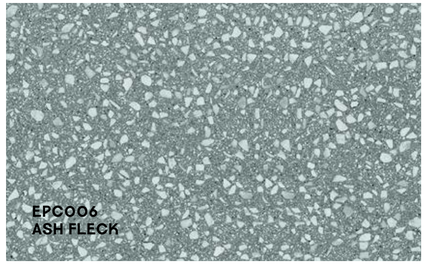

























SPECIFICATIONS

MANUFACTURED FROM	Panels
COMPOSITION	100% Polyester (PET)
SUSTAINABILITY	70% Recycled plastic bottles
APPLICATION	Ceiling tiles
FIRE RATING	EN13501-1 | B S-1 d0 ASTM E-84 – Class A
LENGTH	2780mm (109.45") | 2400mm (94.49")
THICKNESS	12mm | 24mm TOLERANCE ±7%
INSTALLATION	Uniformed Hanging Free Hanging
ACOUSTIC RESULTS	Measurement results Echoshape mounted at an airgap of 0 mm α_w 0.25 / NRC 0.30 Measurement results Echoshape mounted at an airgap of 50 mm α_w 0.55 / NRC 0.65 Measurement results Echoshape mounted at an airgap of 200 mm α_w 0.85 / NRC 0.80
ACOUSTIC CERTIFICATE	ISO 354:2003 EN ISO 22654: 1997 ASTM C423-17
VOC	According to EN ISO 16000-9 Standard: A+
CARE	Indoor use only. Clean with a damp cloth or vacuum. For spills, blot, immediately use water with a soft cloth, and if needed, mild detergent. Dry while still wet. For stubborn stains, try water first, then mild detergent.

INSTALLATION GUIDE

THESE ARE YOUR PARTS

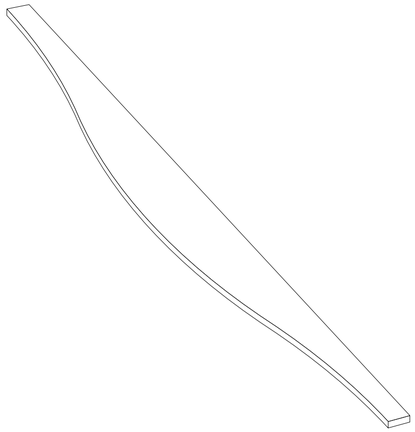

Wave

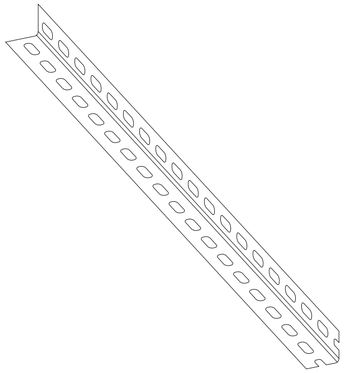

Perforated L - Profile

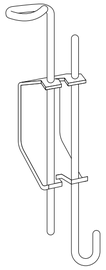

Adjustble Hanger



Dedicated Cable
Hanging Accessory

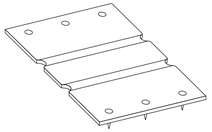

Croc



Screw & Nut

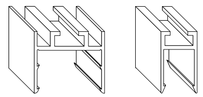

Dedicated U Profile
24mm | 12mm

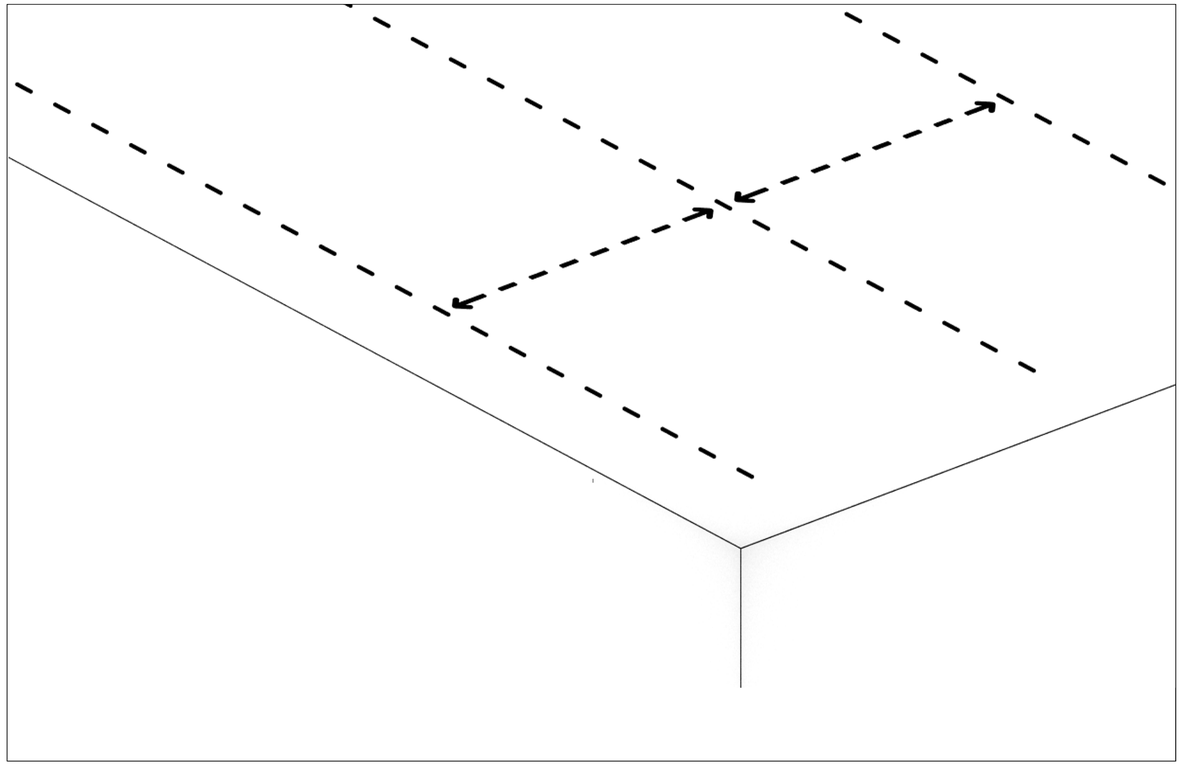

1

Mark the ceiling line on the aboe ceiling . Keep a gap of 80-120cm between hanging rows.

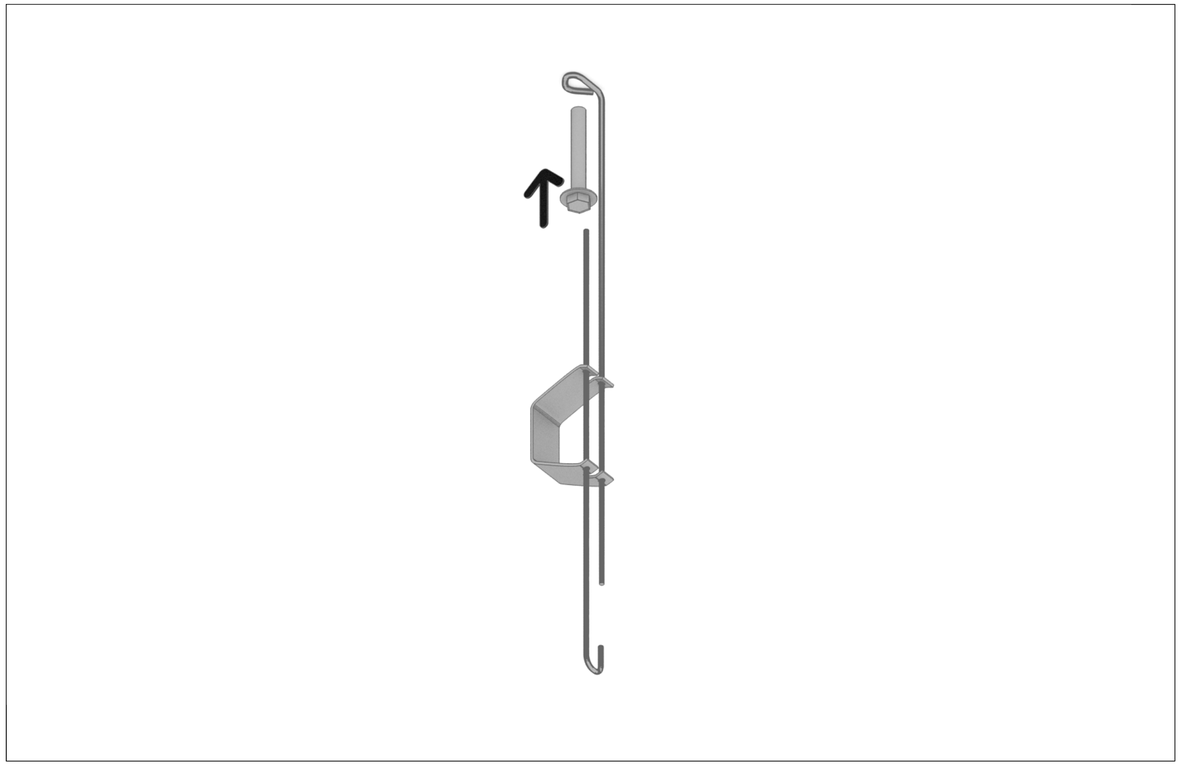

2

Install the adjustable hangers accordingly.

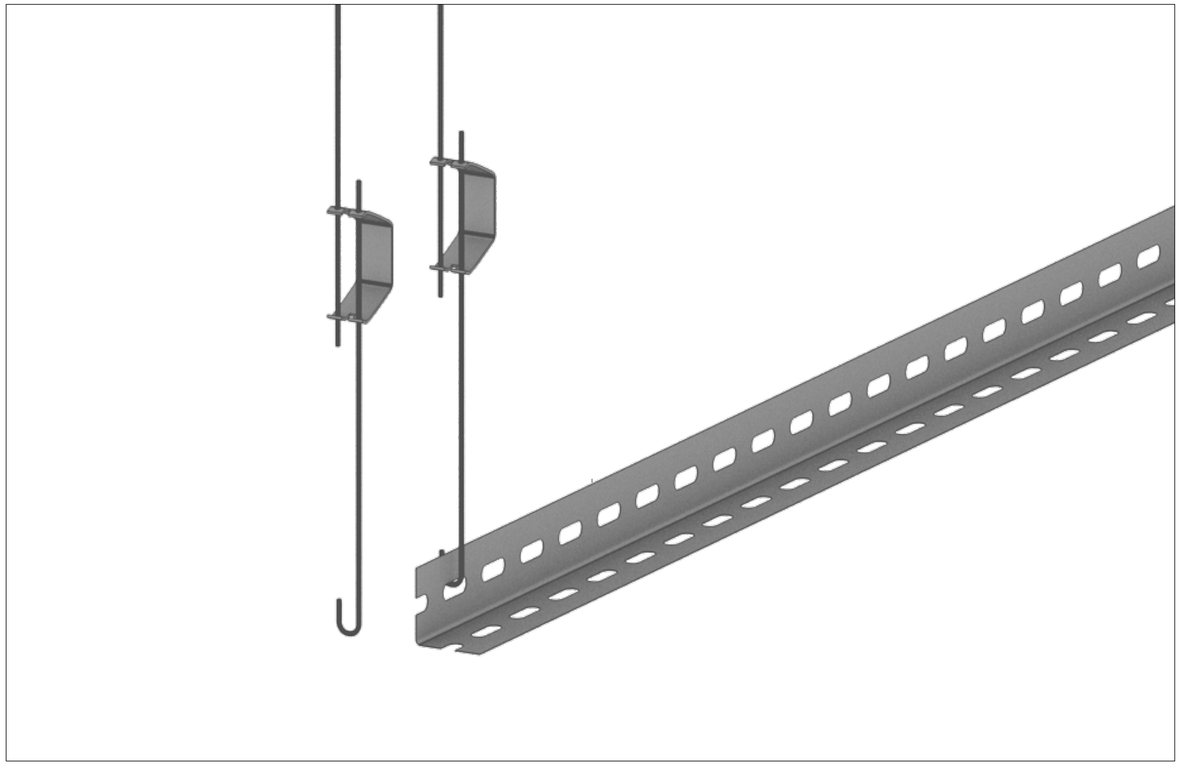

3

Connect the Perfoorated L Profiles to the Adjustable Hangers.

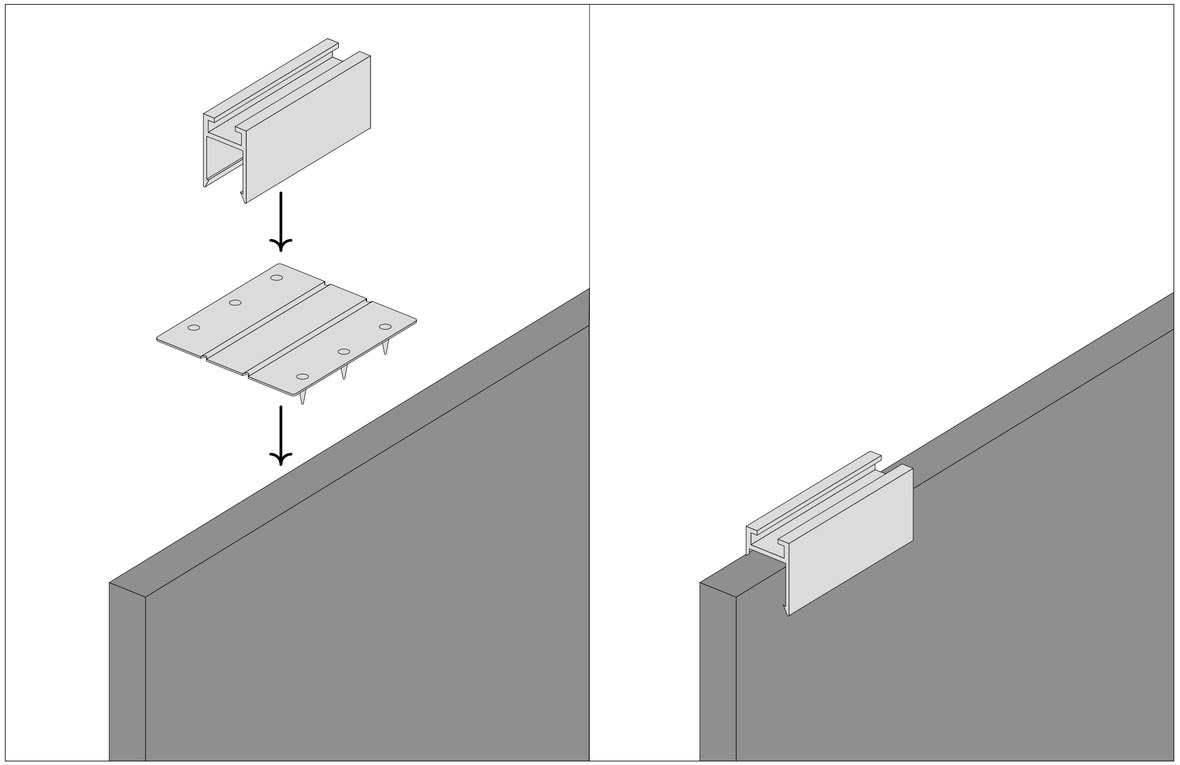

4

Clamp the Croc into the Wave and close the U-Profile on top of it for a secure connection.

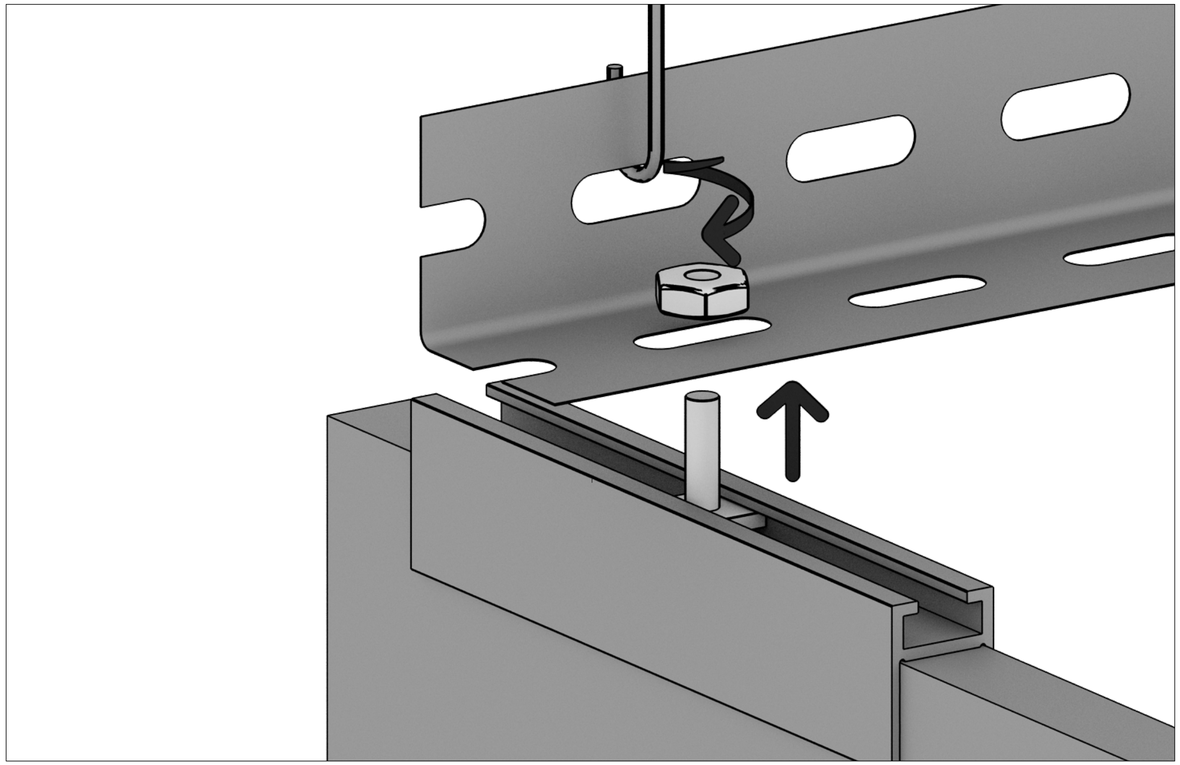

5

Thread the screw into the U profile.

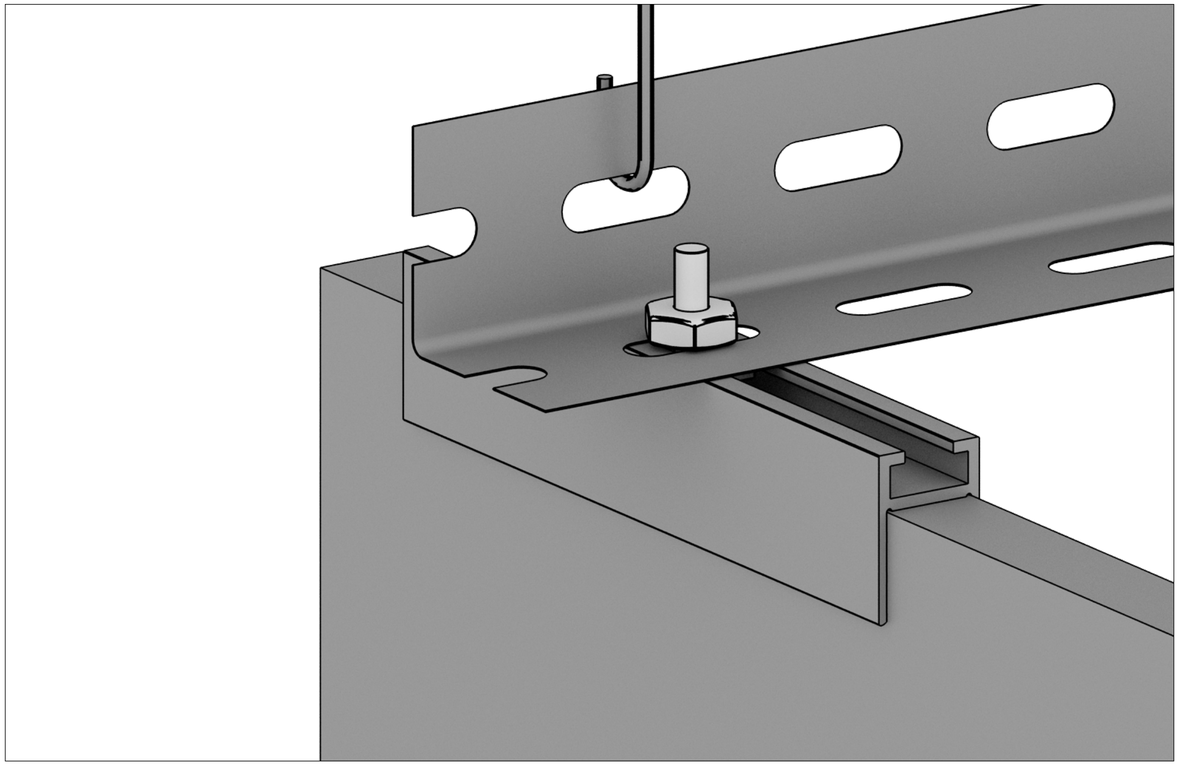

6

Tighten the nut to the screw.

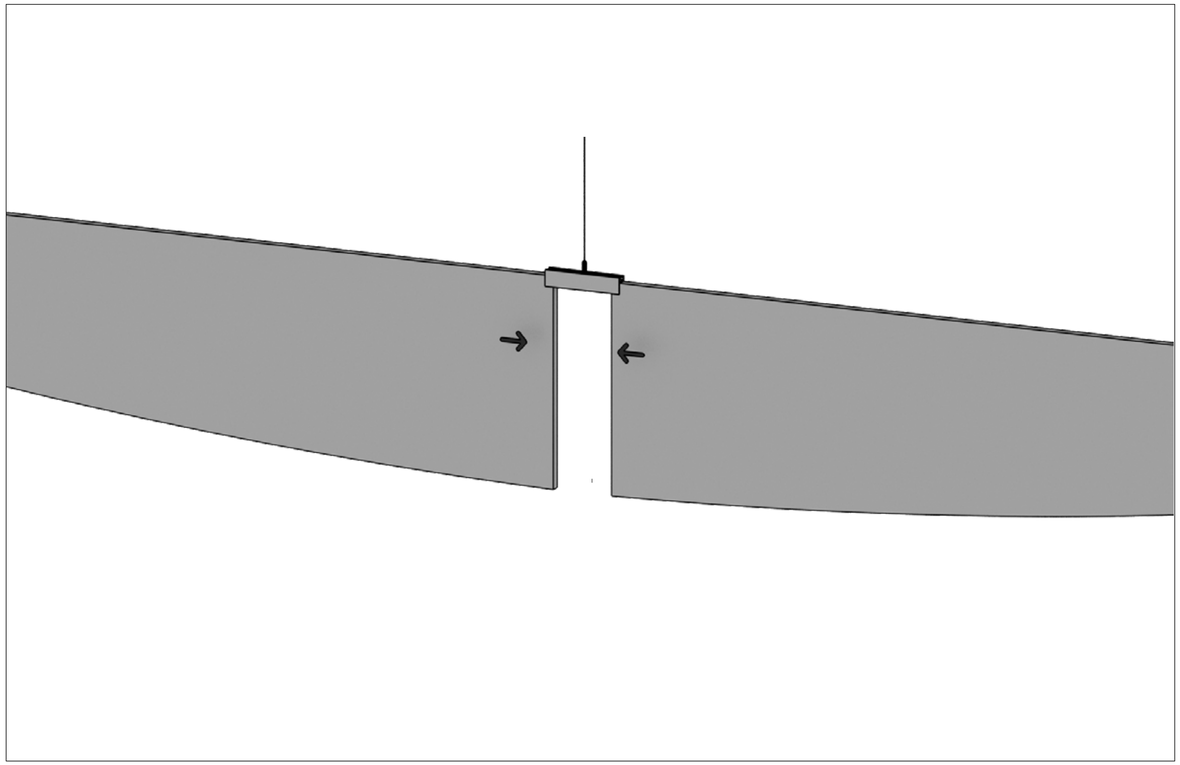

7

When two Waves are aligned - make sure to connect them with a U profile. keep a 5mm detaching distance between two continuous Waves

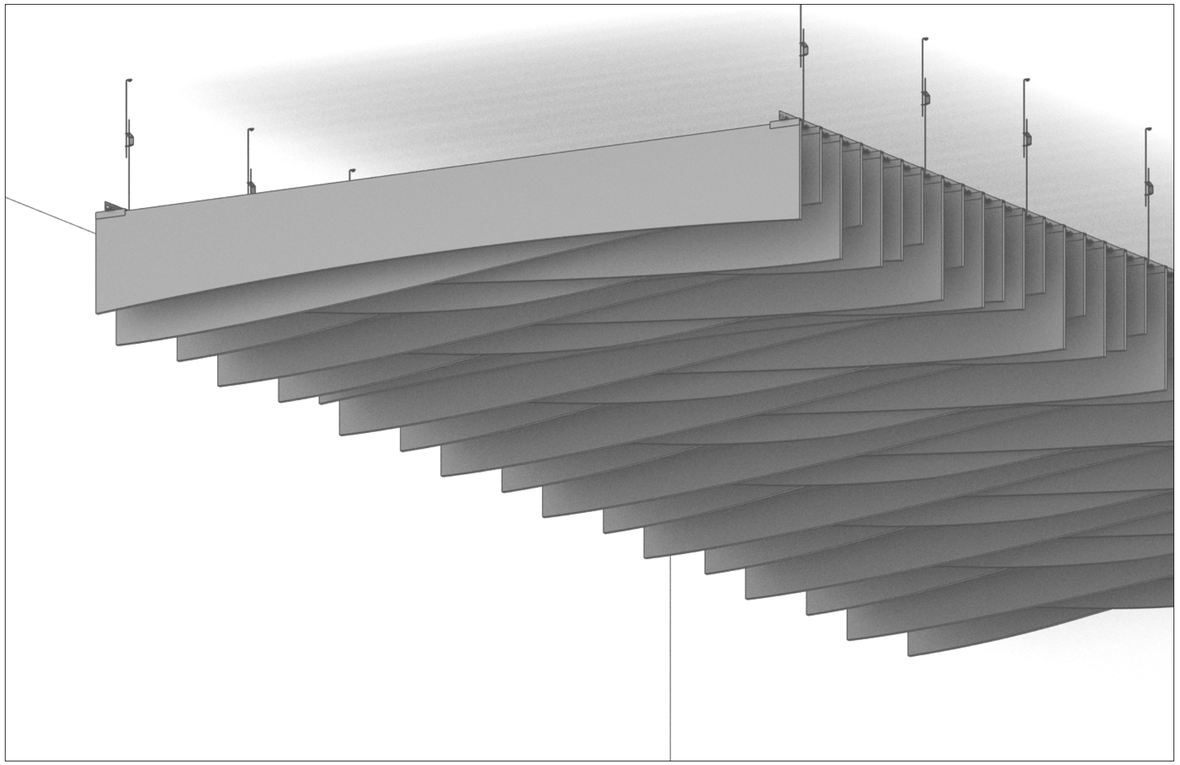

8

Repeat the process for the entire ceiling.

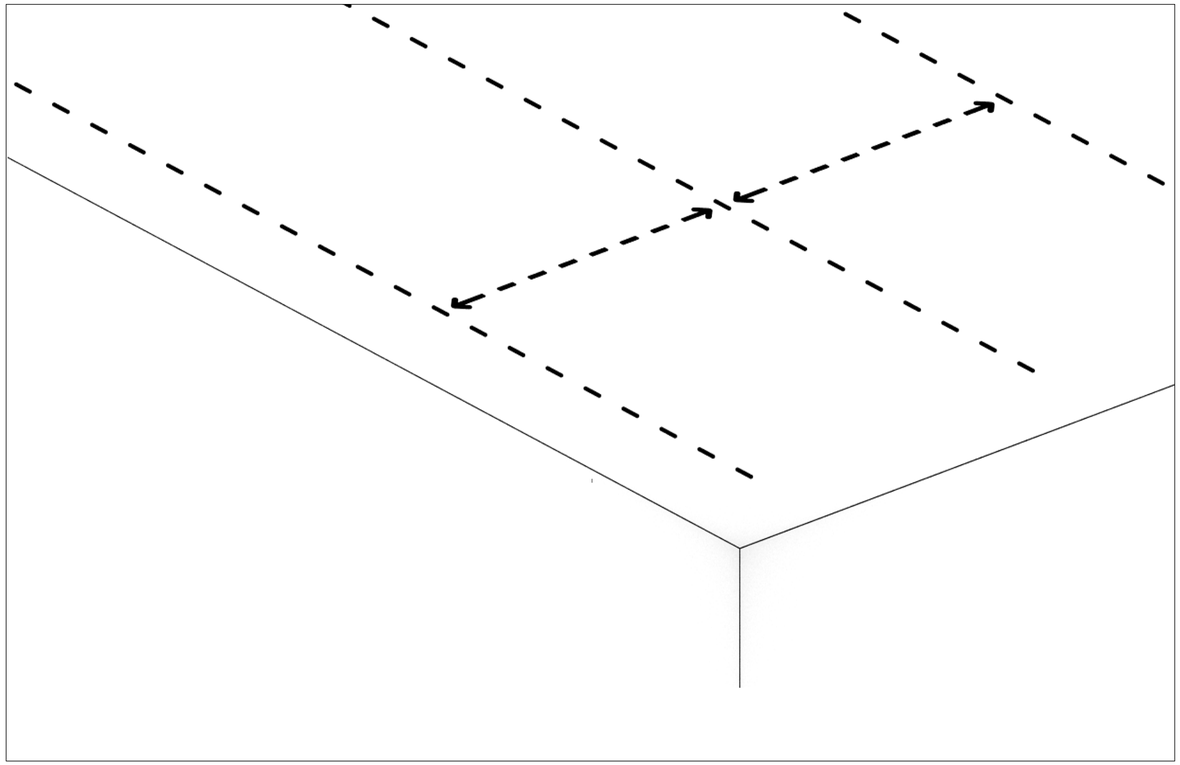

1

Mark the ceiling line on the aboe ceiling . Keep a gap of 80-120cm between hanging rows.

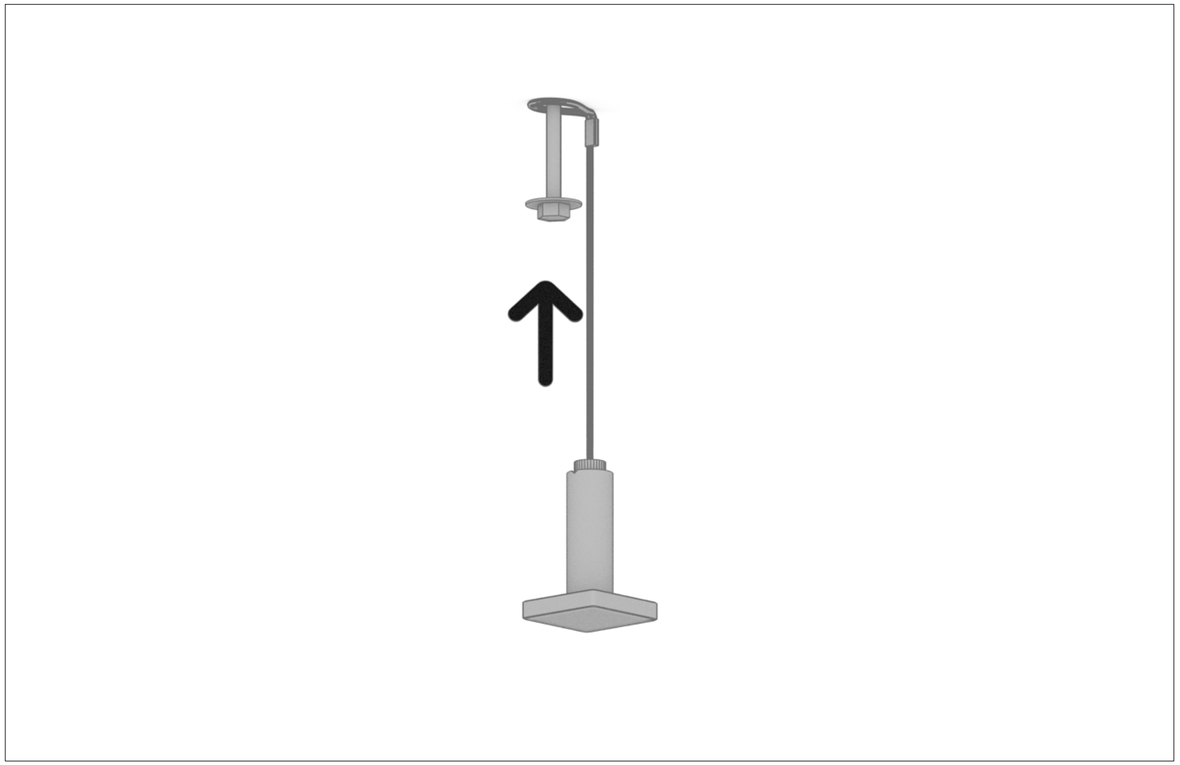

2

Install the Adjustable Hangers accordingly.

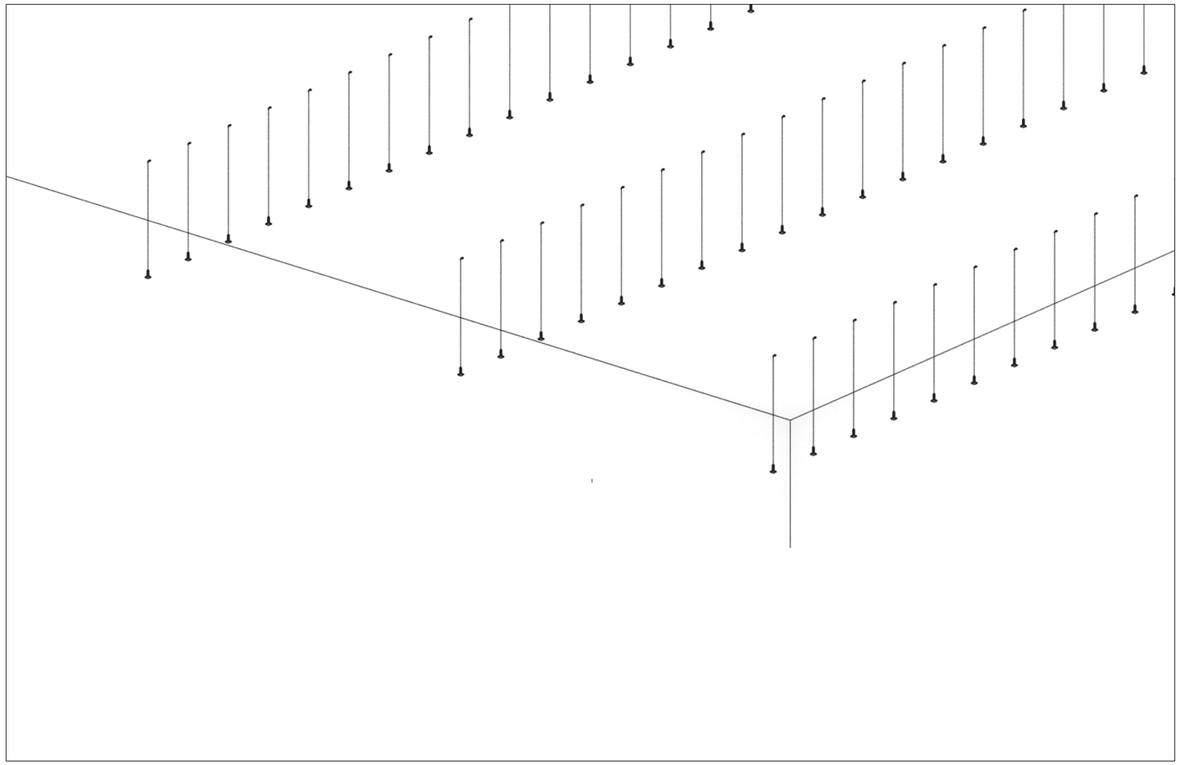

3

Keep the gap at a consistant distance. The distance between hanger should be 150-200mm.

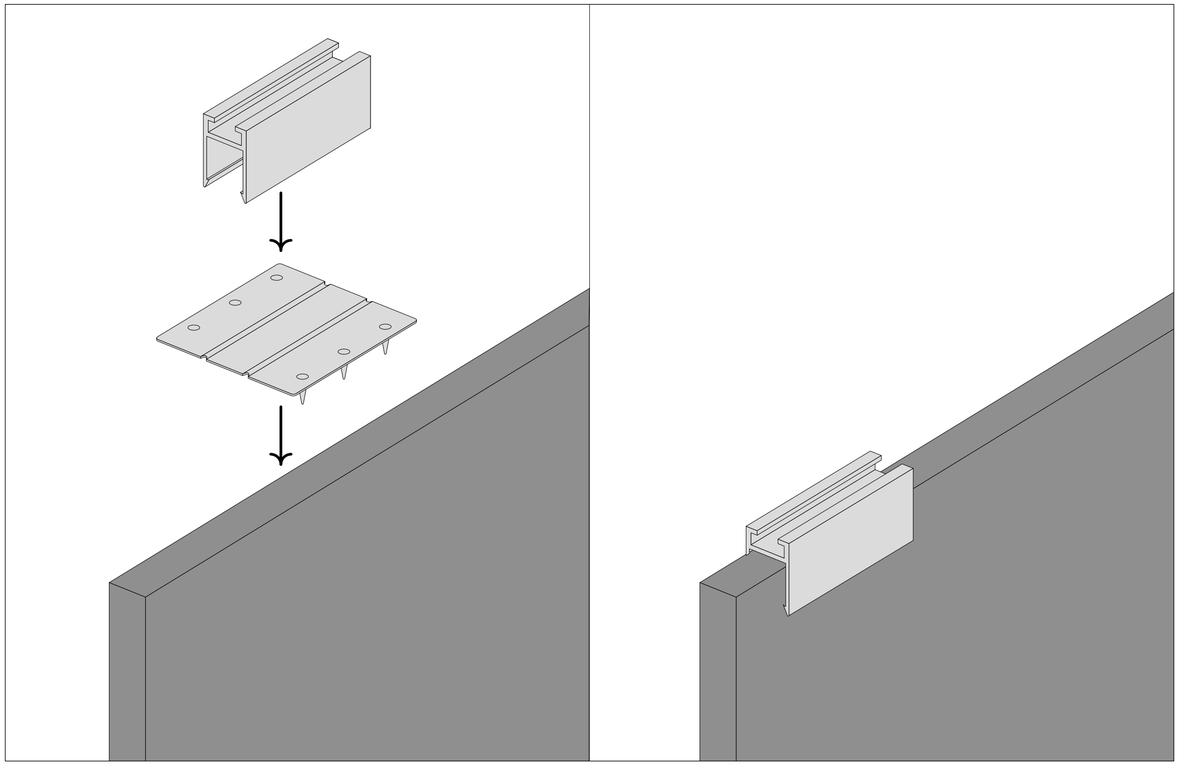

4

Clamp the Croc into the Wave and close the U-Profile on top of it for a secure connection.

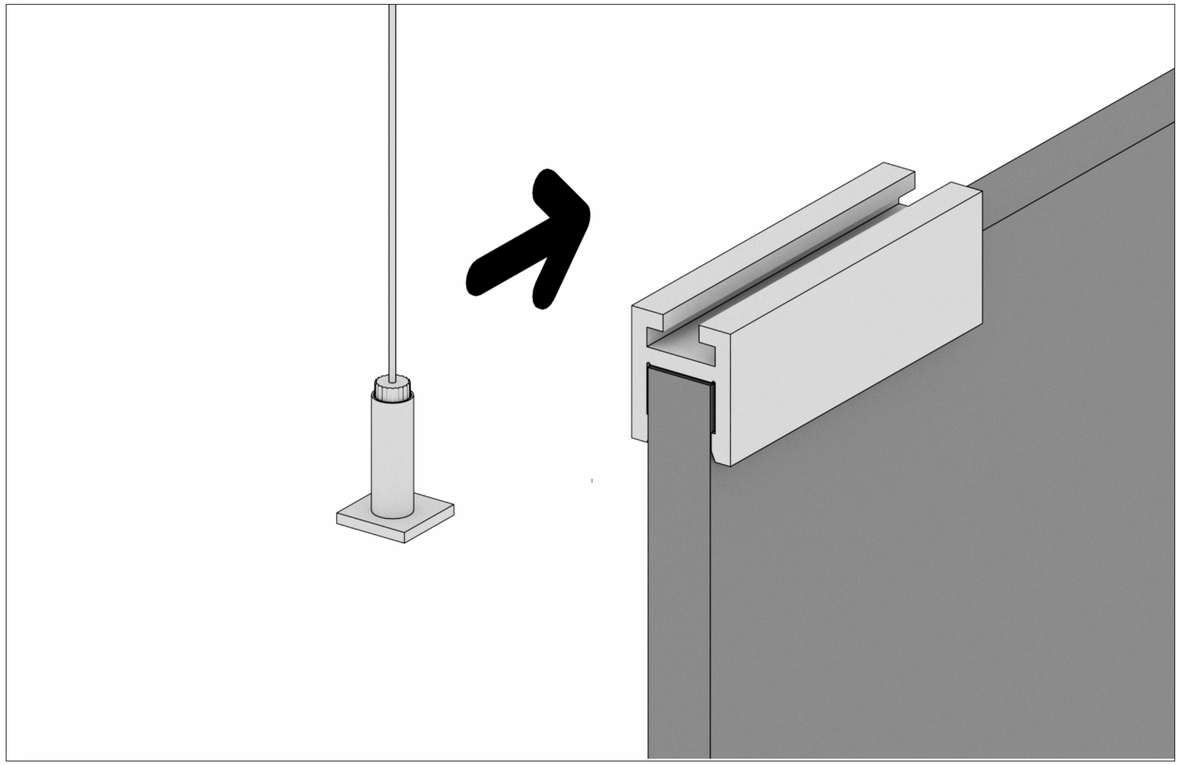

5

Thread the dedicated cable Hanging Accessory into the U Profile.

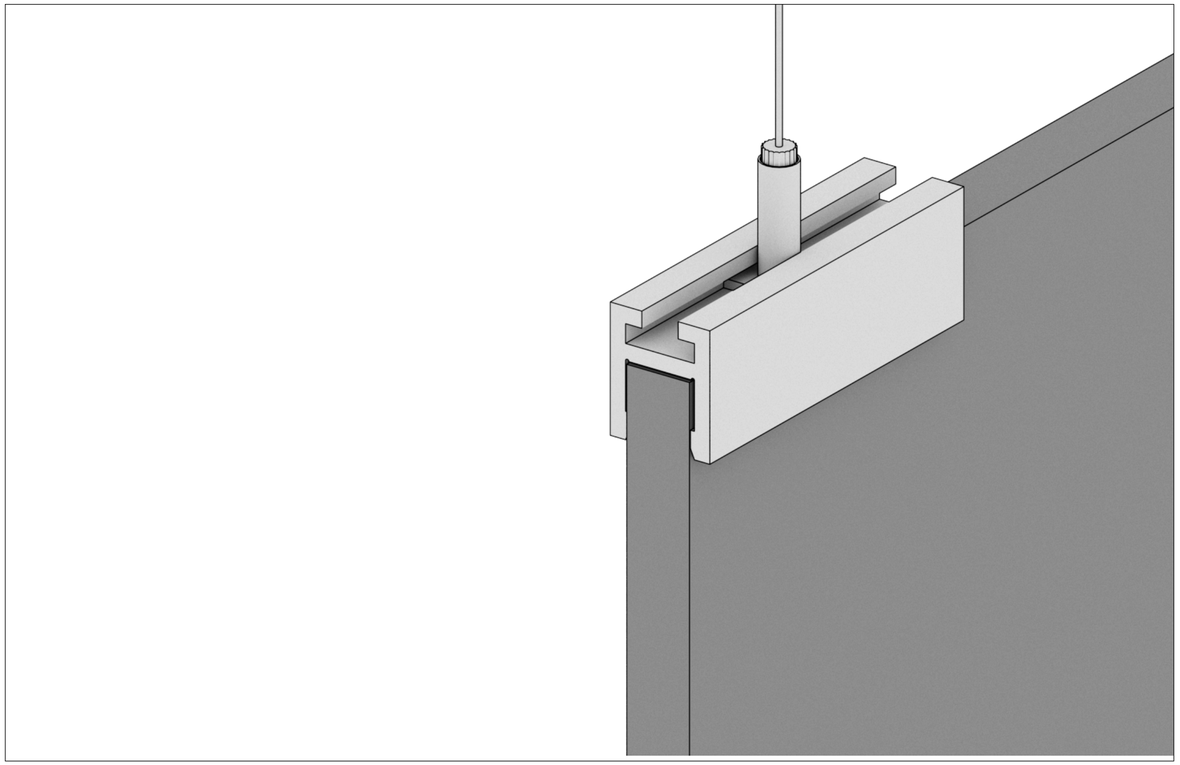

6

Make sure it is properly tightened

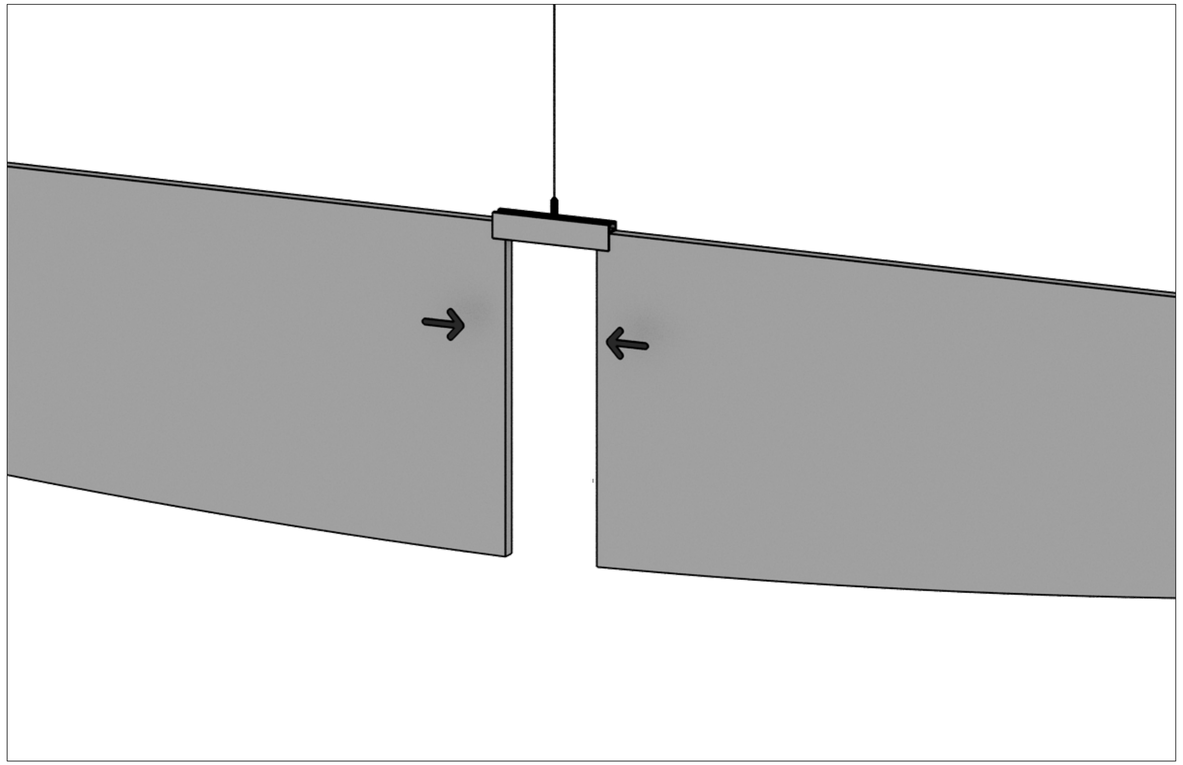

7

Install the Wave tiles on either on the T ceiling grid. or glue it directly to the ceiling

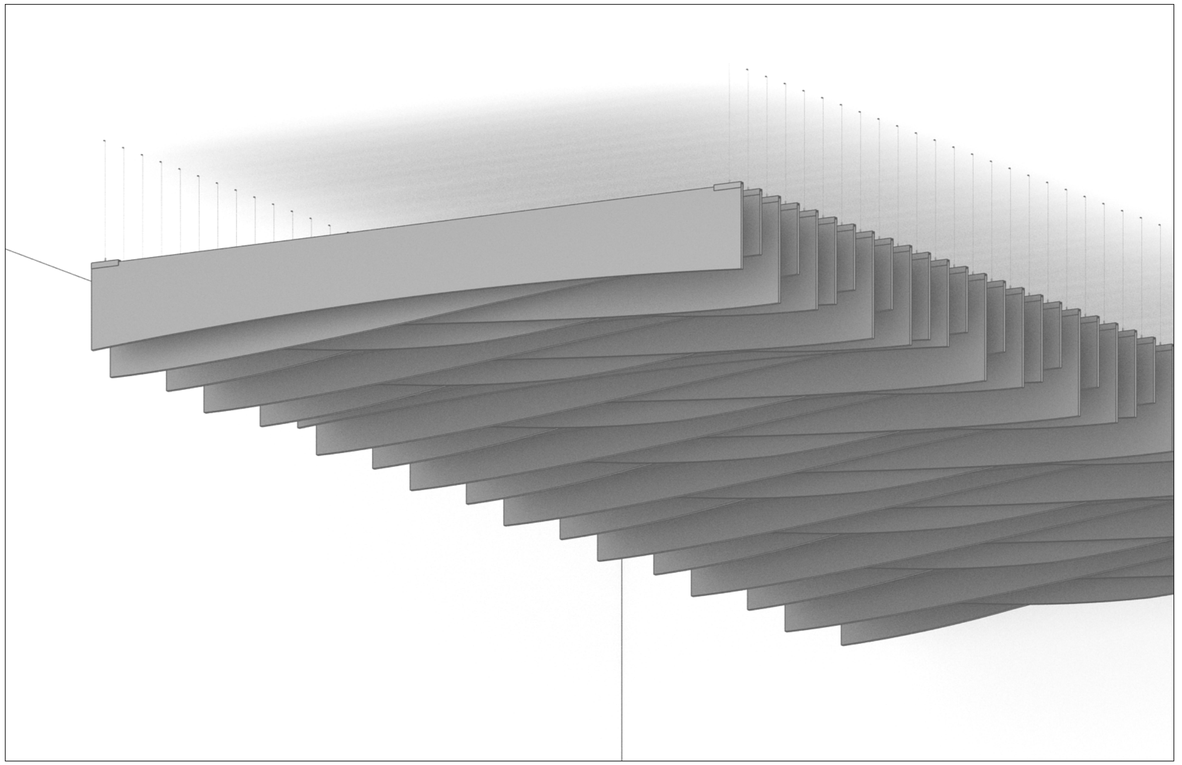

8

Repeat the process for the entire ceiling