GALLOP

WILD

CEILING

GALLOP is an acoustic ceiling tile from the WILD 2025 Collection, featuring bold, curved asymmetric lines in contrasting tones. Inspired by nature's flowing rhythms, it brings depth, elegance, and dynamic light play to any ceiling.



SIZES

600x600mm (23.62x23.62")

THICKNESS

12mm (0.47")

MODELS

Model A

Model B

SYSTEMS

T24

MOQ

8 tiles - Single color

16 tiles - Duo tone

*Orders ship with even quantity of Model A and B.

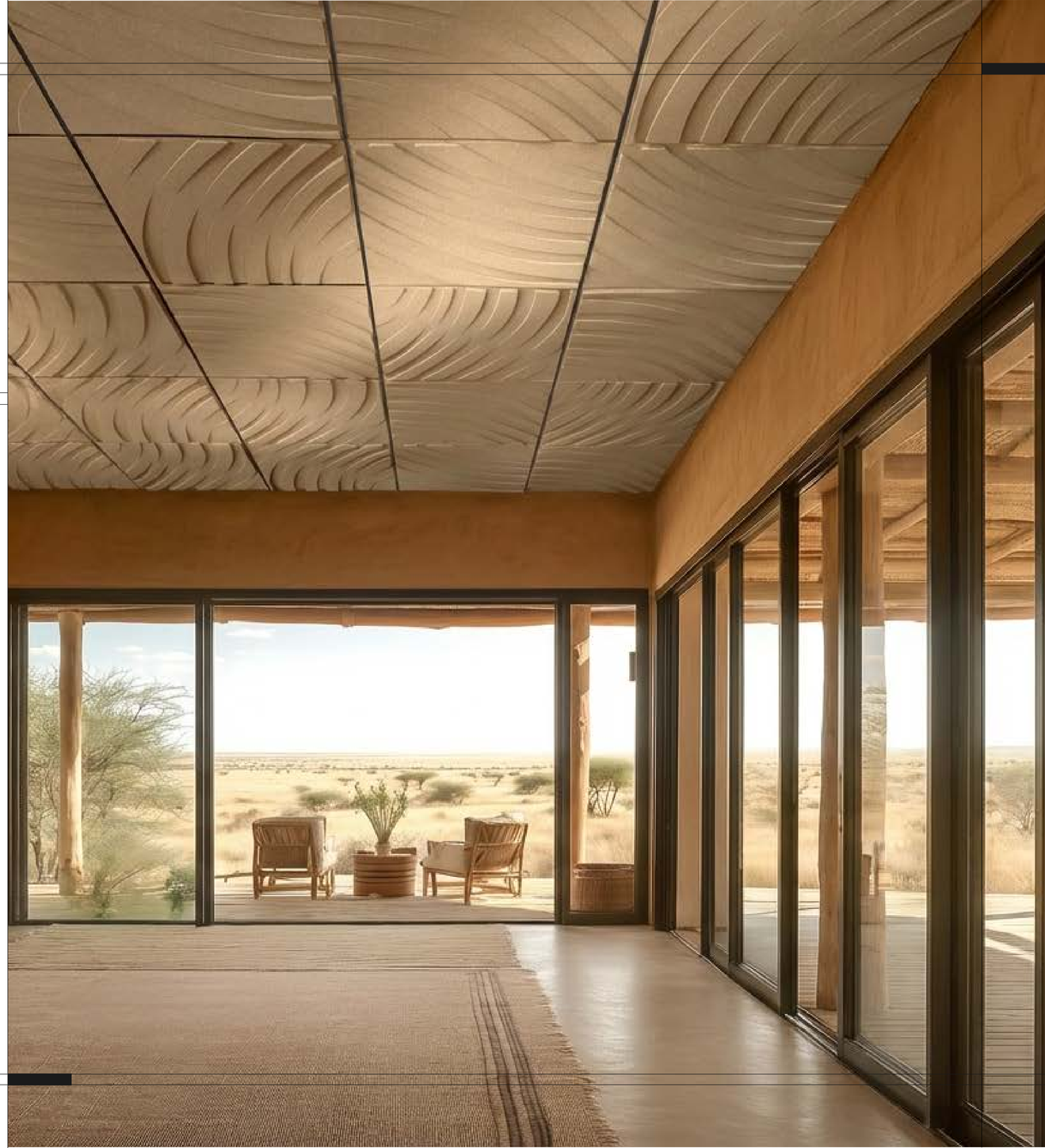

HOW TO PLACE AN ORDER

GALLOP offers versatile possibilities for shaping your space. As you plan your layout, take a moment to reflect on a few guiding questions to help refine your design.

Please note that the tiles cannot be cut, so the ceiling must be planned using full tiles only. Accurate planning will ensure a seamless and visually pleasing result.

Please note the minimum order quantities:
requires order of 8 units in single color.
requires order of 16 units in duo color.

*Orders ship with even quantity of Model A and B.



Ensure the ceiling dimensions meet the required specifications

PAGE 5

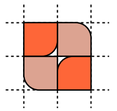

Select the internal layout according to the available options

PAGE 8



Choose your desired color from our color palette – printing option available

PAGE 4

GEOMETRIC

GALLOP

MODEL A

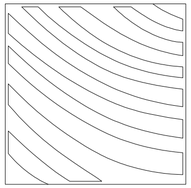

MODEL B

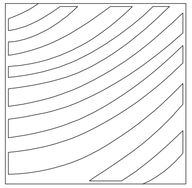

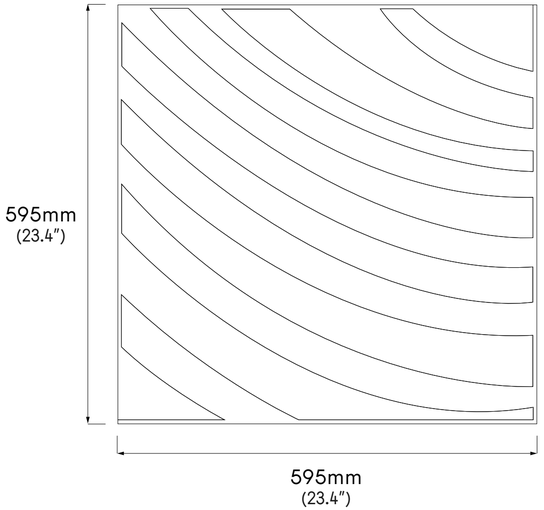

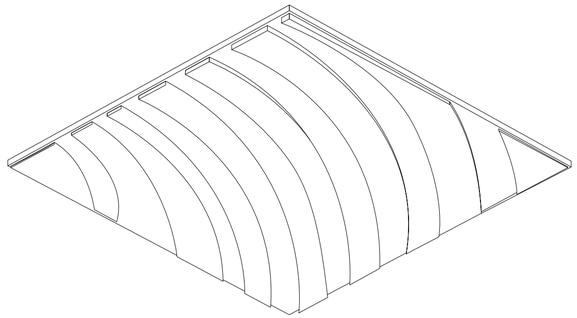

INSTALLATION:

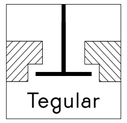

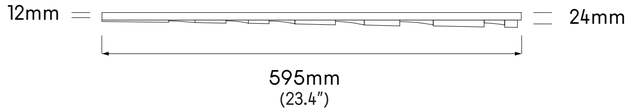

SUGGESTED PATTERN

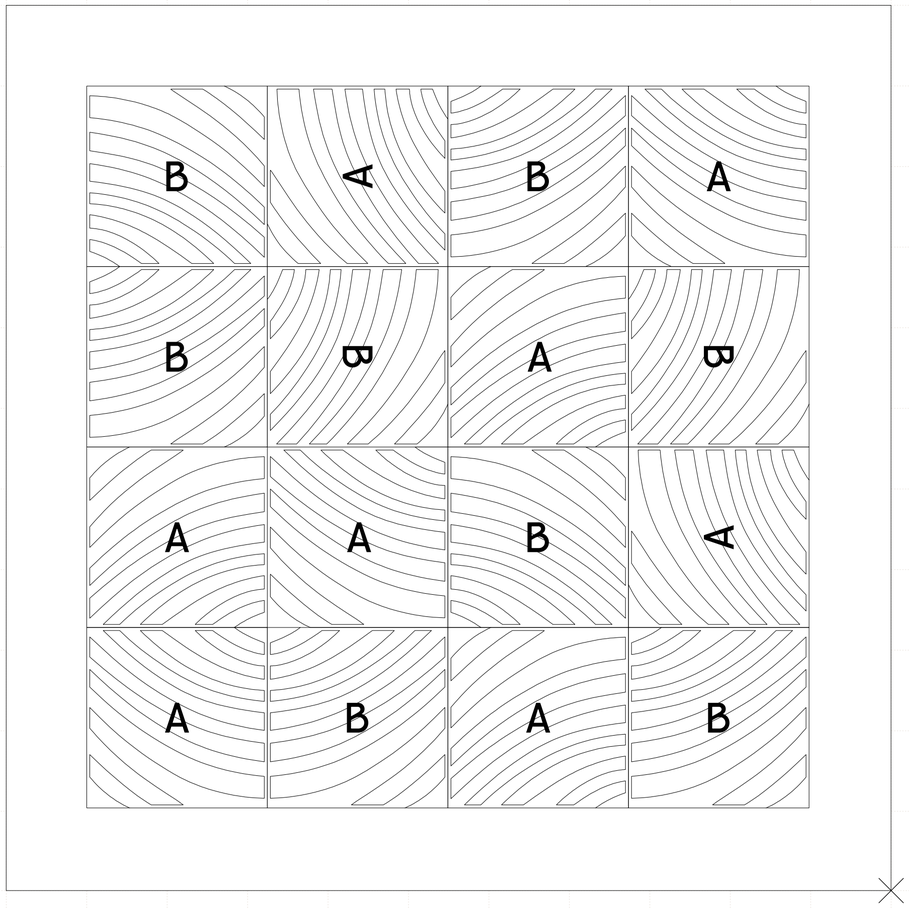

COLORS

echoshape panels are crafted from 12mm PET felt, serving as the core material in our acoustic solutions. Available in a curated range of colors, these panels are designed to enhance both the visual and acoustic qualities of any space.

Choose from subtle neutrals for a seamless look, or introduce bold tones to create striking contrasts. Due to the nature of the PET felt manufacturing process, a soft heathered texture may appear, blending multiple shades within each panel. As a result, slight color variations between units are natural and reflect the sustainable, recycled origin of the material.

Please note: colors may appear differently on screens or in print. For accurate color matching, we recommend requesting a physical sample.



PRINTED PATTERNS

echoshape panels are crafted from 12mm PET felt, serving as the core material in our acoustic solutions. Available in a curated range of colors, these panels are designed to enhance both the visual and acoustic qualities of any space.

Choose from subtle neutrals for a seamless look, or introduce bold tones to create striking contrasts. Due to the nature of the PET felt manufacturing process, a soft heathered texture may appear, blending multiple shades within each panel. As a result, slight color variations between units are natural and reflect the sustainable, recycled origin of the material.

Please note: colors may appear differently on screens or in print. For accurate color matching, we recommend requesting a physical sample.



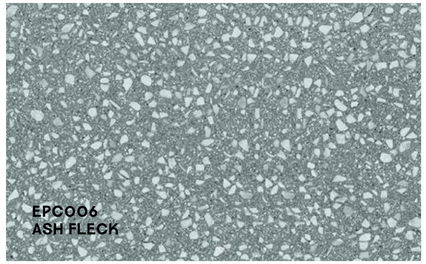

























SPECIFICATIONS

MANUFACTURED FROM	Panels
COMPOSITION	100% Polyester (PET)
SUSTAINABILITY	70% Recycled plastic bottles
APPLICATION	Ceiling tiles
FIRE RATING	EN13501-1 | B S-1 d0 ASTM E-84 – Class A
SIZE	600x600mm (23.62x23.62")
THICKNESS	12mm TOLERANCE ±7%
INSTALLATION	Mounted on structural ceiling: T24
ACOUSTIC RESULTS	Measurement results Echoshape mounted at an airgap of 0 mm α_w 0.25 / NRC 0.30 Measurement results Echoshape mounted at an airgap of 50 mm α_w 0.55 / NRC 0.65 Measurement results Echoshape mounted at an airgap of 200 mm α_w 0.85 / NRC 0.80
ACOUSTIC CERTIFICATE	ISO 354:2003 EN ISO 22654: 1997 ASTM C423-17
VOC	According to EN ISO 16000-9 Standard: A+
CARE	Indoor use only. Clean with a damp cloth or vacuum. For spills, blot, immediately use water with a soft cloth, and if needed, mild detergent. Dry while still wet. For stubborn stains, try water first, then mild detergent.

INSTALLATION GUIDE

THESE ARE YOUR PARTS

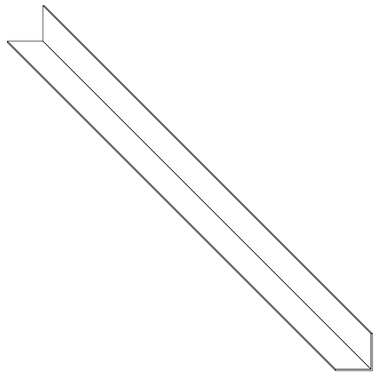

L Profile (Optional)

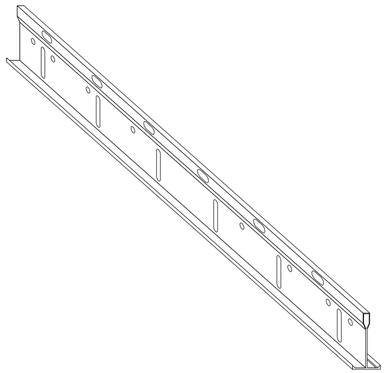

T Main Profile

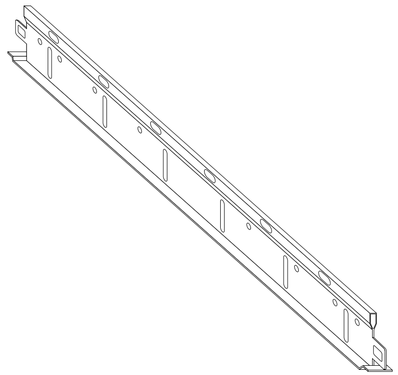

T Side Profile

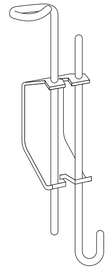

Adjustble Hanger

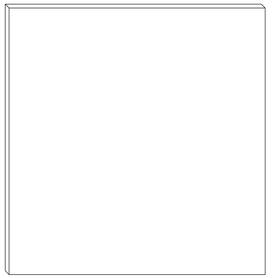

Tiles

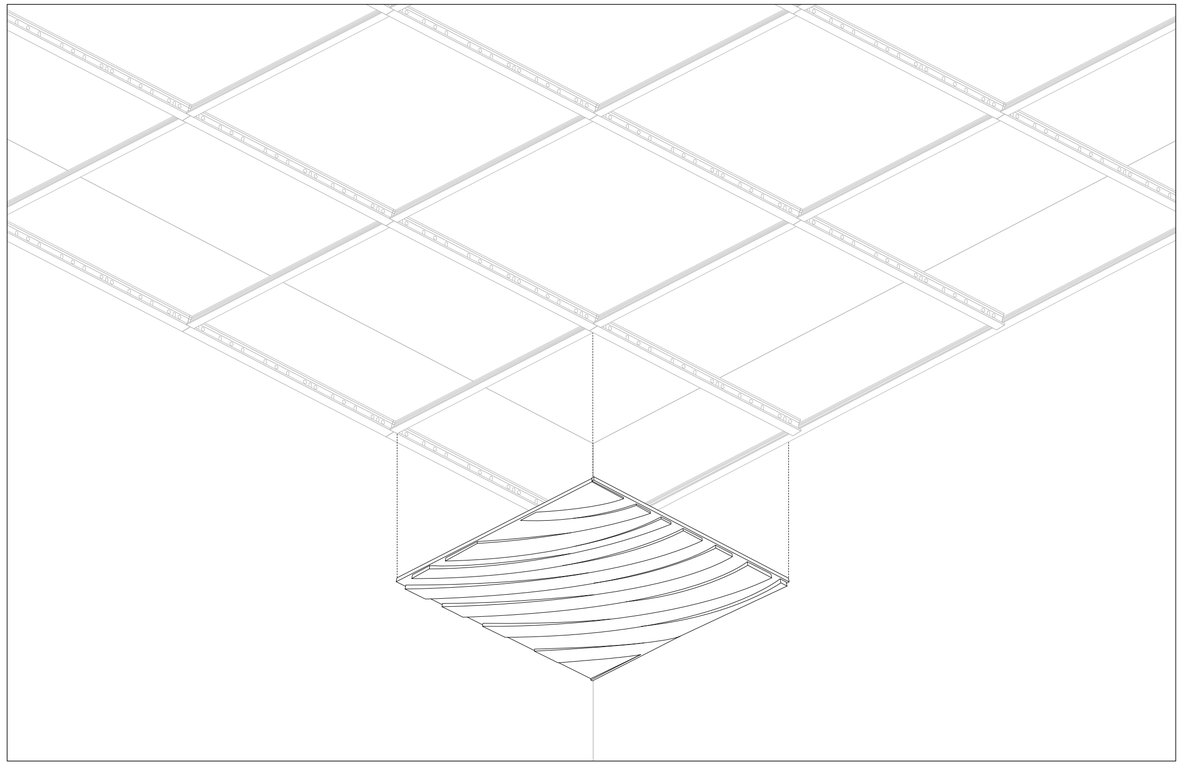

1

Install the Gallop tiles on a T ceiling grid.

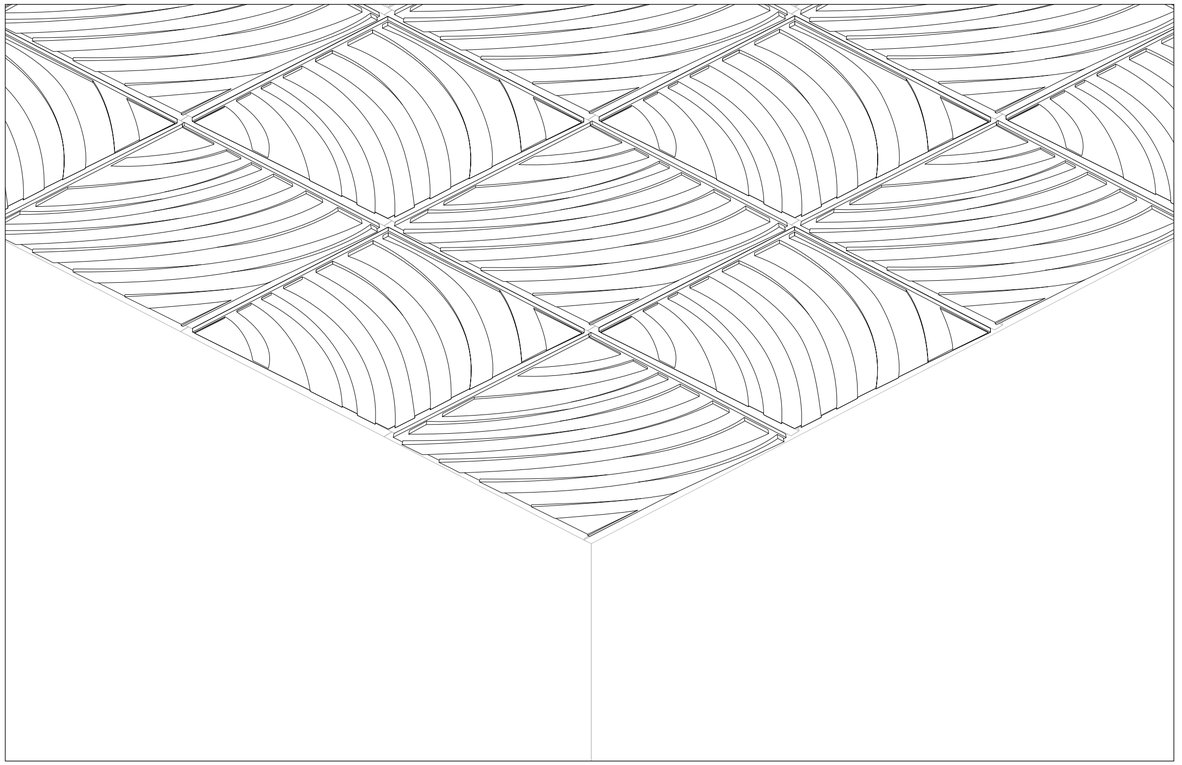

2

Repeat the process for the entire ceiling