FRAME

FRAME FAMILY

CEILING

Direct

FRAME Where retro lines shape modern silence. A collection of 3D acoustic ceiling panels featuring a classic retro cornice design. The family includes two distinct styles, available in a variety of shades from our updated color palette. Additionally, the panels can be custom-painted in any desired color to perfectly suit your space.

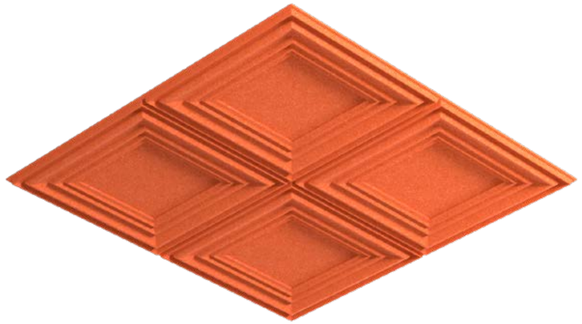

SYSTEMS
T15 (EU only)
T24 (US only)

THICKNESS
12mm (0.47")

MODELS
Slim Halo
Bold

SIZES
595x595mm (23.4x23.4")
595x1195mm (23.4x47.05")

MOQ
8 Units Square
4 Units Rectangle



HOW TO PLACE AN ORDER

FRAME offers versatile possibilities for shaping your space. As you plan your layout, take a moment to reflect on a few guiding questions to help refine your design.

Please note that the tiles cannot be cut, so the ceiling must be planned using full tiles only. Accurate planning will ensure a seamless and visually pleasing result.

Bold and Slim can be combined together.

Please note the minimum order quantities:
Square requires order of 8 units.
Rectangle requires order of 4 units



Ensure the ceiling dimensions meet the required specifications

PAGE 8

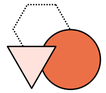

Choose your preferred model: Slim, Bold or Halo

PAGE 3-4

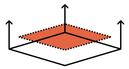

What type of ceiling grid profile is used?
T15 or T24

PAGE 3



Choose your desired color from our color palette – printing option available

PAGE 6-7

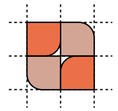

Select the internal layout according to the available options

PAGE 10

GEOMETRIC

SLIM CE-DIA-VE-EPXX-12-6060

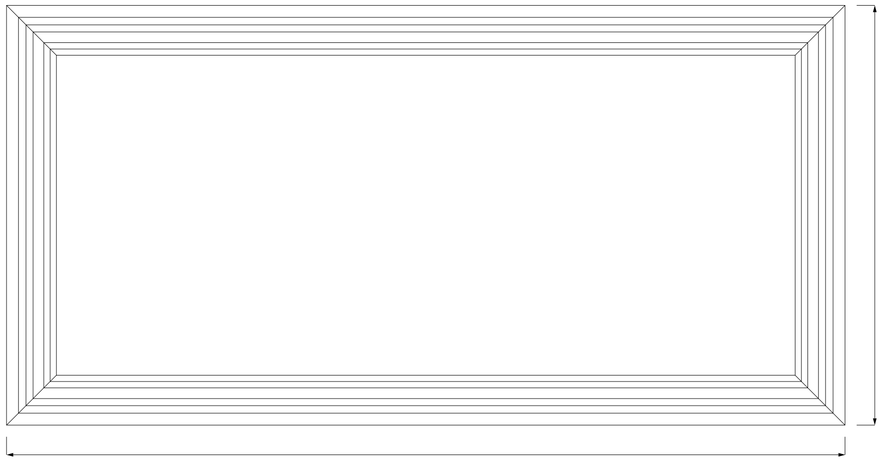

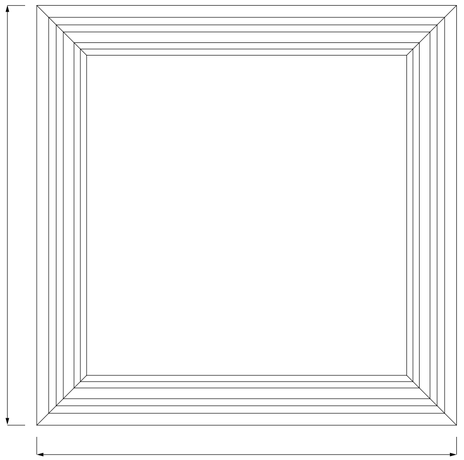

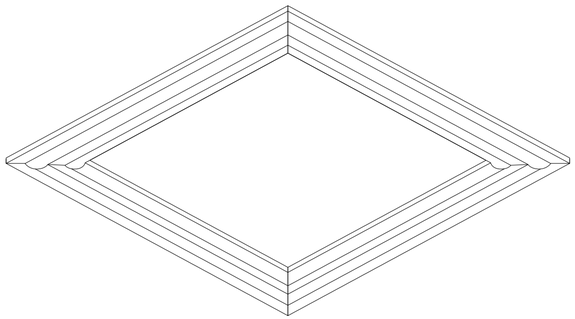

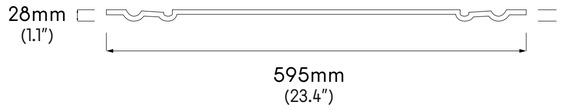

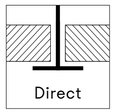

T15 / T24

GEOMETRIC

BOLD CE-DIA-VE-EPXX-12-6060

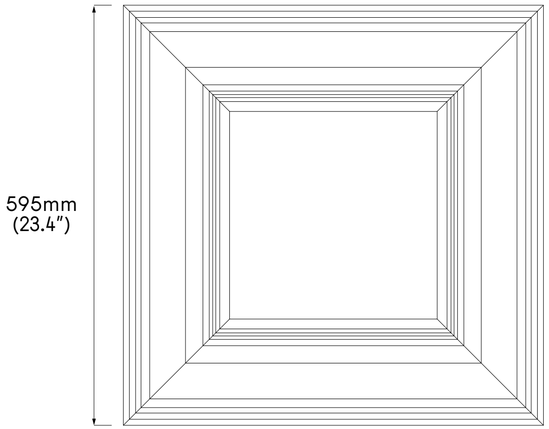

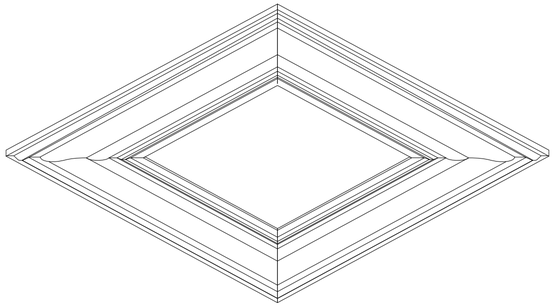

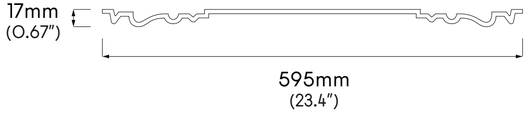

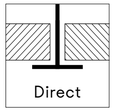

T15 Only

GEOMETRIC

HALO CE-DIA-VE-EPXX-12-6060

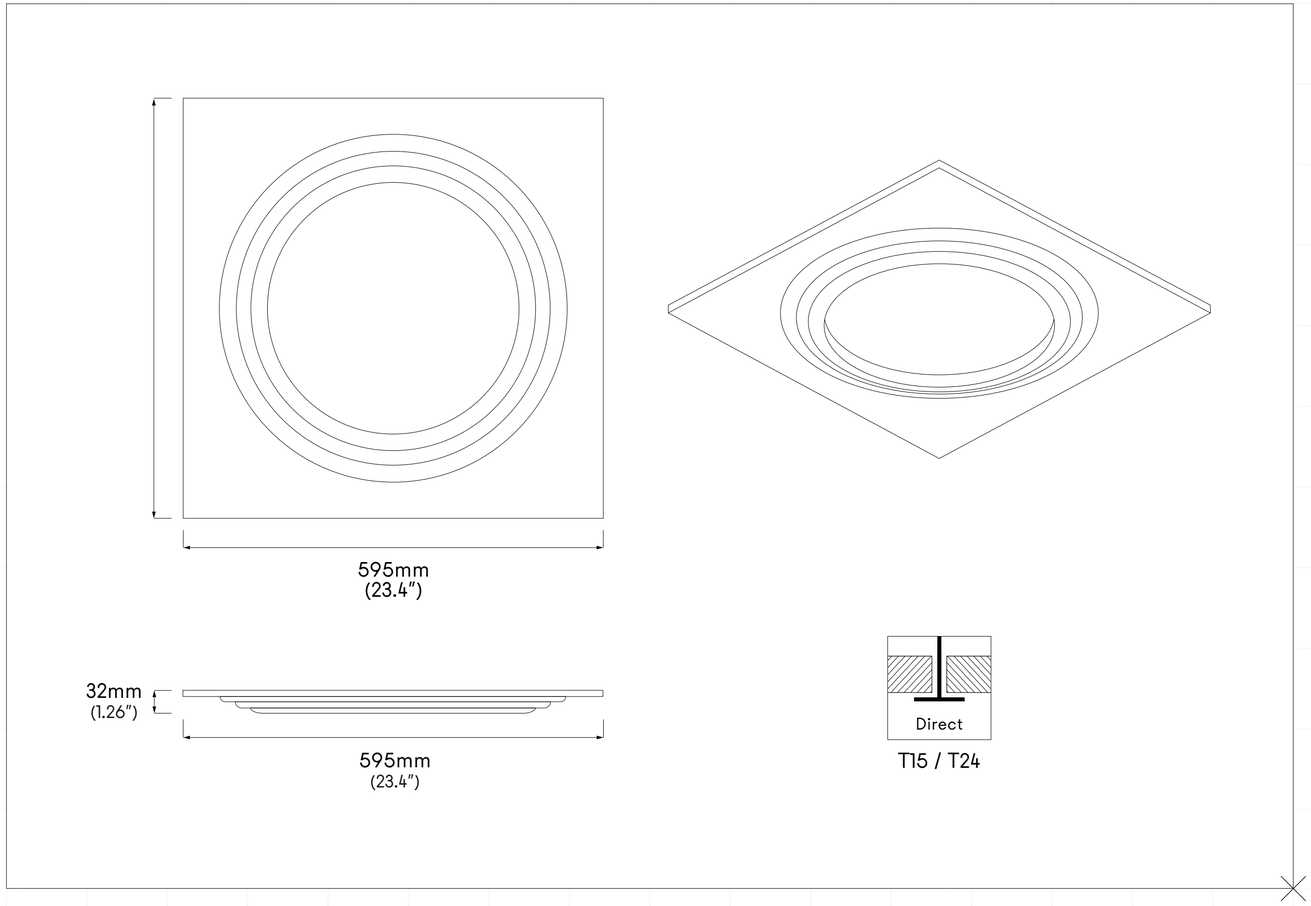

COLORS

echoshape panels are crafted from 12mm PET felt, serving as the core material in our acoustic solutions. Available in a curated range of colors, these panels are designed to enhance both the visual and acoustic qualities of any space.

Choose from subtle neutrals for a seamless look, or introduce bold tones to create striking contrasts. Due to the nature of the PET felt manufacturing process, a soft heathered texture may appear, blending multiple shades within each panel. As a result, slight color variations between units are natural and reflect the sustainable, recycled origin of the material.

Please note: colors may appear differently on screens or in print. For accurate color matching, we recommend requesting a physical sample.



PRINTED PATTERNS

echoshape panels are crafted from 12mm PET felt, serving as the core material in our acoustic solutions. Available in a curated range of colors, these panels are designed to enhance both the visual and acoustic qualities of any space.

Choose from subtle neutrals for a seamless look, or introduce bold tones to create striking contrasts. Due to the nature of the PET felt manufacturing process, a soft heathered texture may appear, blending multiple shades within each panel. As a result, slight color variations between units are natural and reflect the sustainable, recycled origin of the material.

Please note: colors may appear differently on screens or in print. For accurate color matching, we recommend requesting a physical sample.



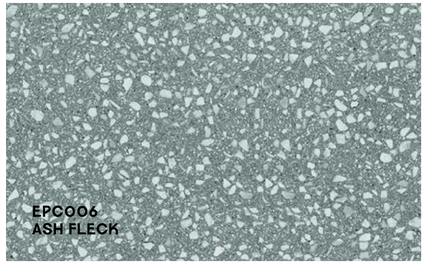

























SPECIFICATIONS

MANUFACTURED FROM	Panels
COMPOSITION	100% Polyester (PET)
SUSTAINABILITY	70% Recycled plastic bottles
APPLICATION	Ceiling tiles
FIRE RATING	EN13501-1 | B S-1 d0 ASTM E-84 – Class A
SIZE	595x595mm (23.4x23.4") | 595x1195mm (23.4x47.05")
THICKNESS	10mm TOLERANCE ±7%
INSTALLATION	Mounted on structural ceiling: T15 (EU only) T24 (US only)
ACOSTIC RESULTS	Measurement results Echoshape mounted at an airgap of 0 mm α_w 0.25 / NRC 0.30 Measurement results Echoshape mounted at an airgap of 50 mm α_w 0.55 / NRC 0.65 Measurement results Echoshape mounted at an airgap of 200 mm α_w 0.85 / NRC 0.80
ACOSTIC CERTIFICATE	ISO 354:2003 EN ISO 22654: 1997 ASTM C423-17
VOC	According to EN ISO 16000-9 Standard: A+
CARE	Indoor use only. Clean with a damp cloth or vacuum. For spills, blot, immediately use water with a soft cloth, and if needed, mild detergent. Dry while still wet. For stubborn stains, try water first, then mild detergent.

INSTALLATION GUIDE

THESE ARE YOUR PARTS

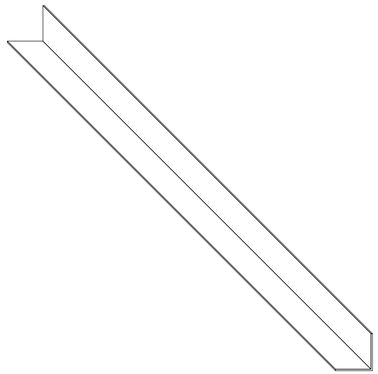

L Profile (Optional)

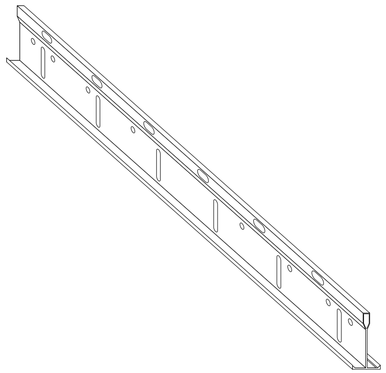

T Main Profile

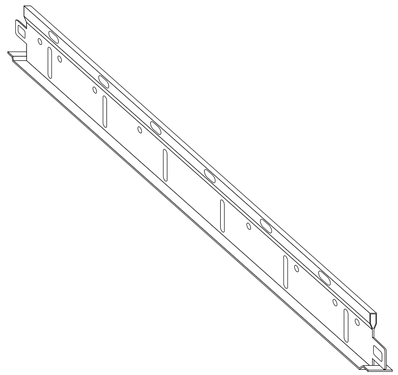

T Side Profile

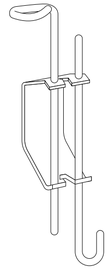

Adjustble Hanger

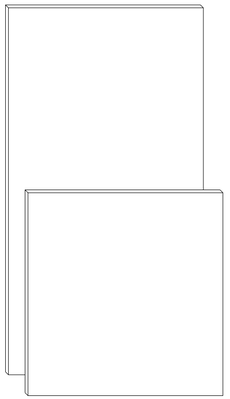

Tiles

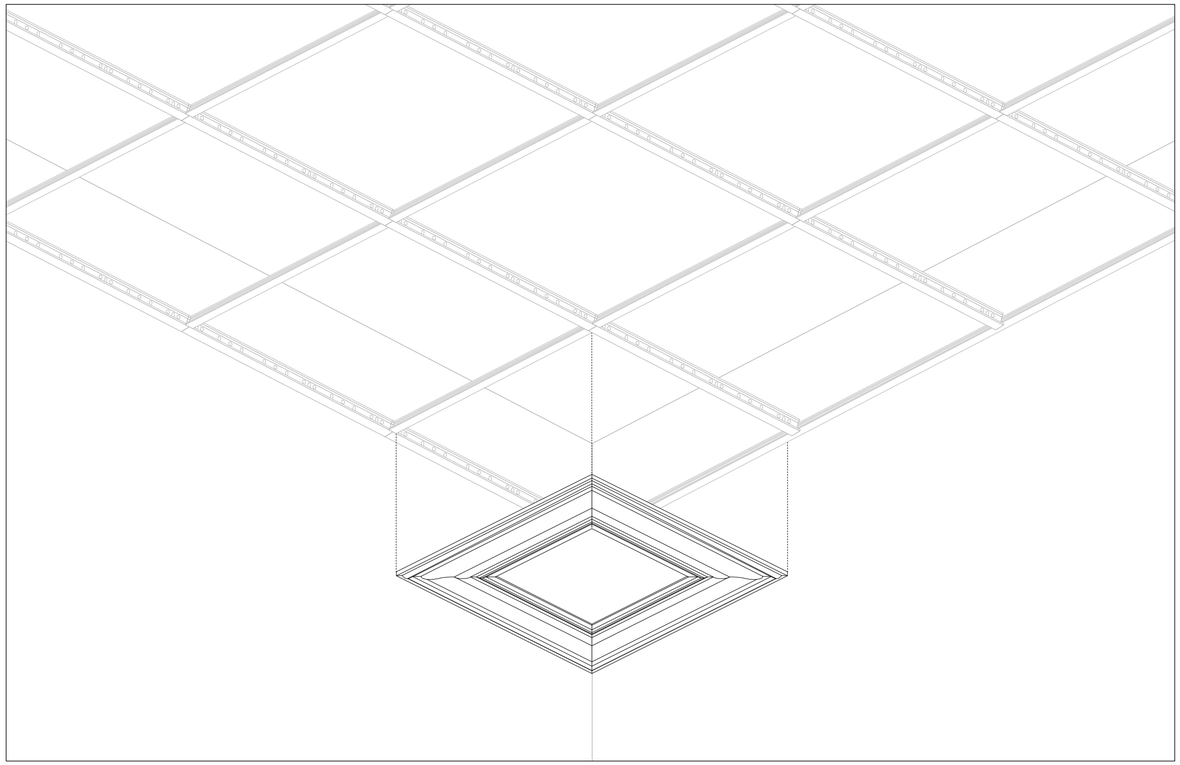

1

Install the Frame tiles on a T ceiling grid.

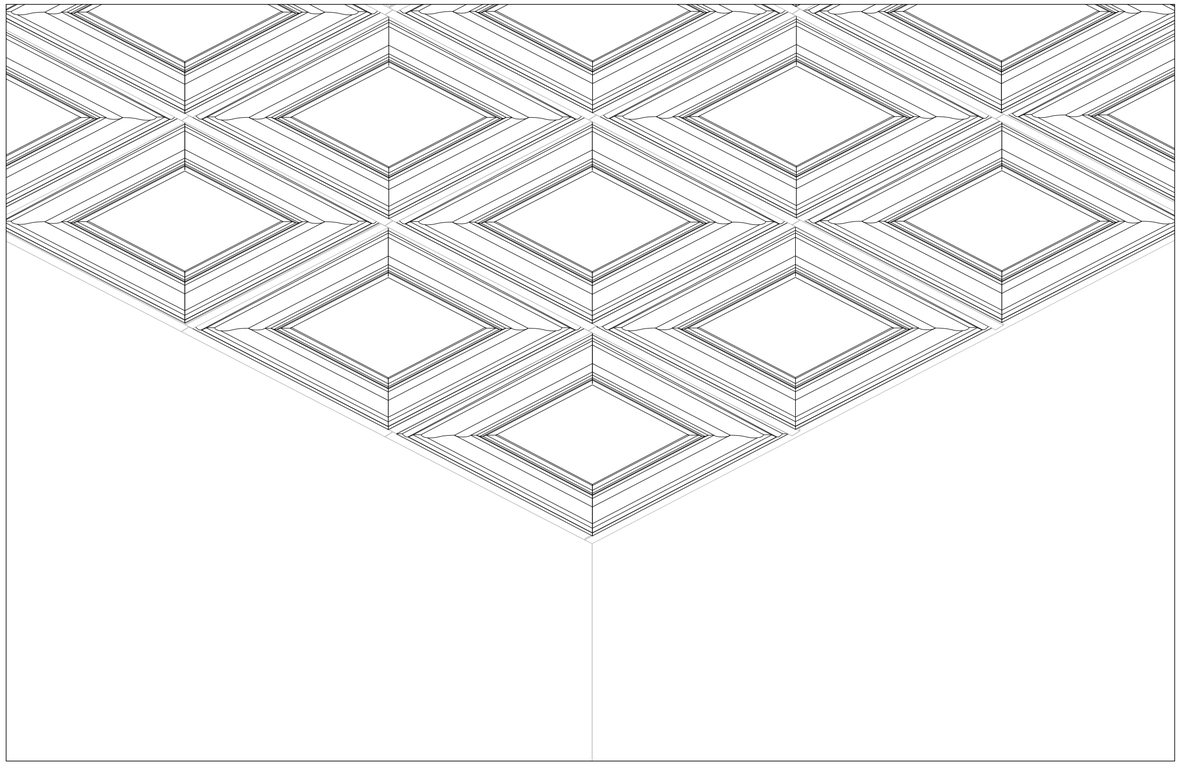

2

Repeat the process for the entire ceiling.