BLADE

BAFFLE

CEILING

Blade is vertically installed units. It is avalible in different sizes and a wide range of colors. Two hanging methods: free hanging of each of the Blades using a connector profile that maintains a uniform hanging. It is being sold as 4 part module that can be looped.

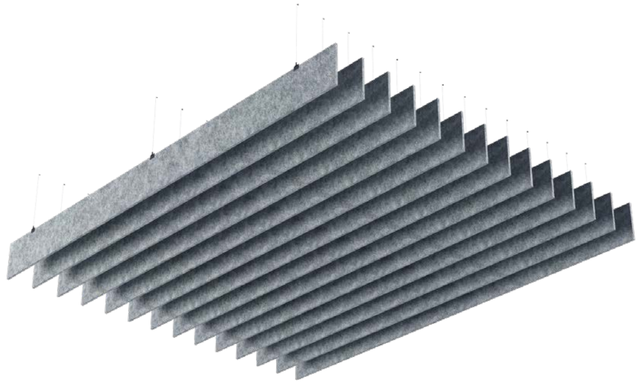

HEIGHT

150mm (5.91")
200mm (7.87")
300mm (11.81")
400mm (15.75")

THICKNESS

12mm (0.47")
24mm (0.94")

LENGTH

2780mm (97.64")
2400mm (94.49")

INSTALLATION

Uniformed Hanging
Free Hanging

MOQ

8 Units in a single color



HOW TO PLACE AN ORDER

Blade offers versatile possibilities for shaping your space. As you plan your layout, take a moment to reflect on a few guiding questions to help refine your design.

Please note that the tiles cannot be cut, so the ceiling must be planned using full tiles only. Accurate planning will ensure a seamless and visually pleasing result.

minimum order quantities :
8 Units in a single color



Choose your preferred models

PAGE 3



Choose your desired color from our color palette – printing option available

PAGE 5



Ensure the ceiling dimensions meet the required specifications

PAGE 6

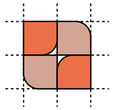

Select the internal layout according to the available options

PAGE 8

GEOMETRIC

MODELS

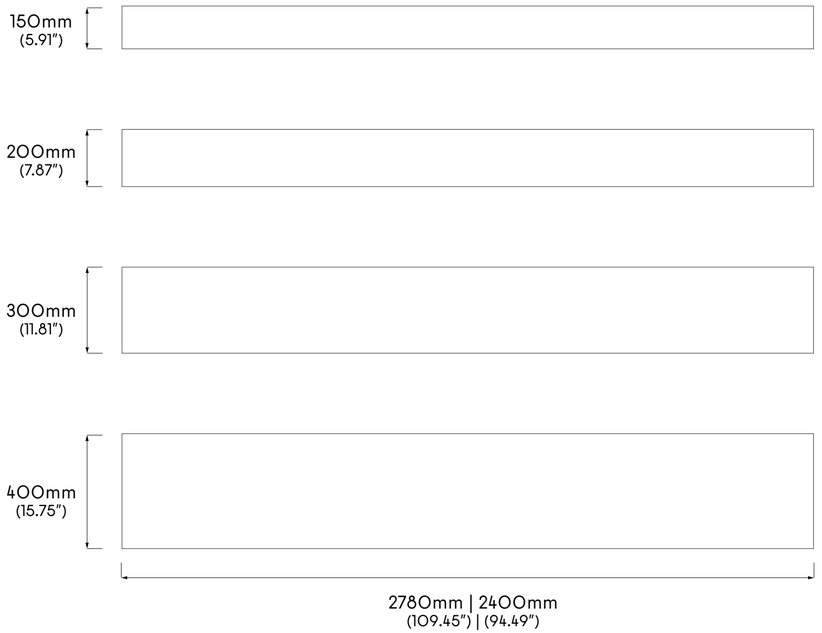

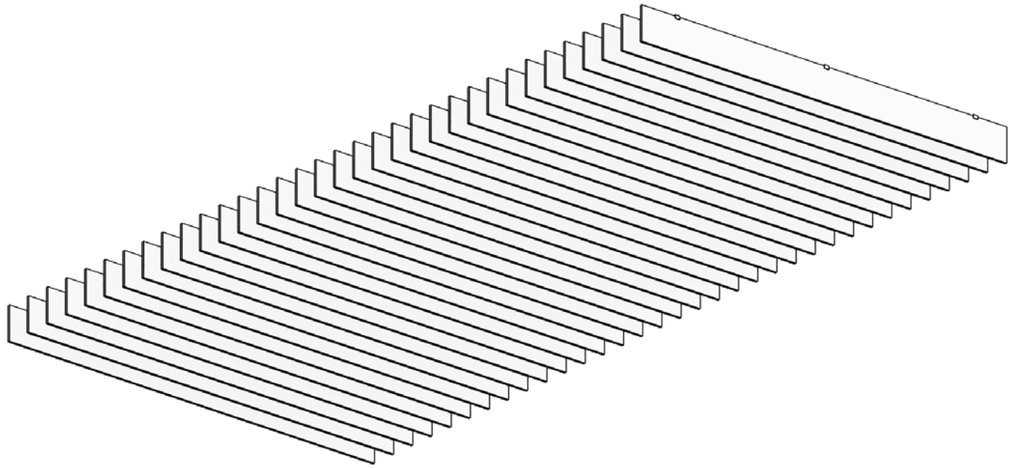

GEOMETRIC

MODELS

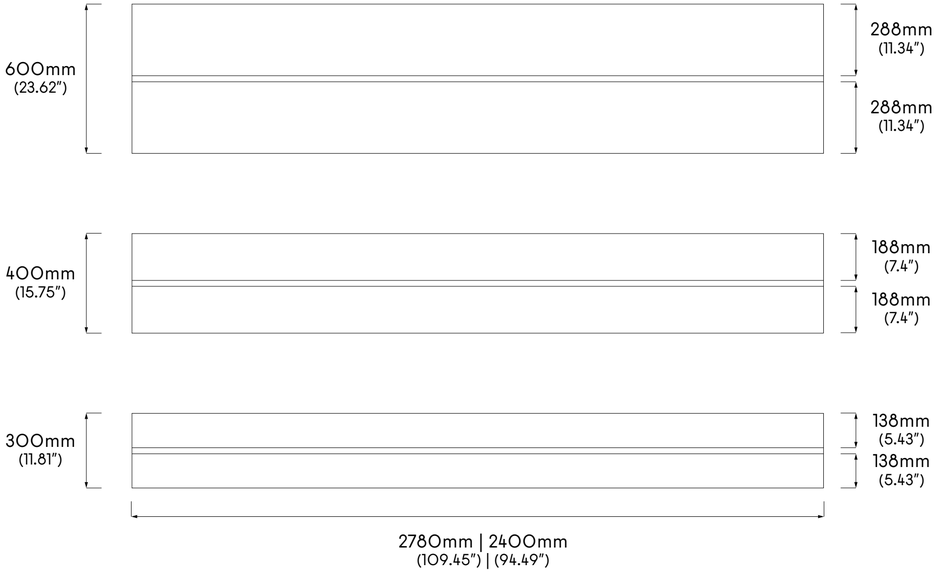

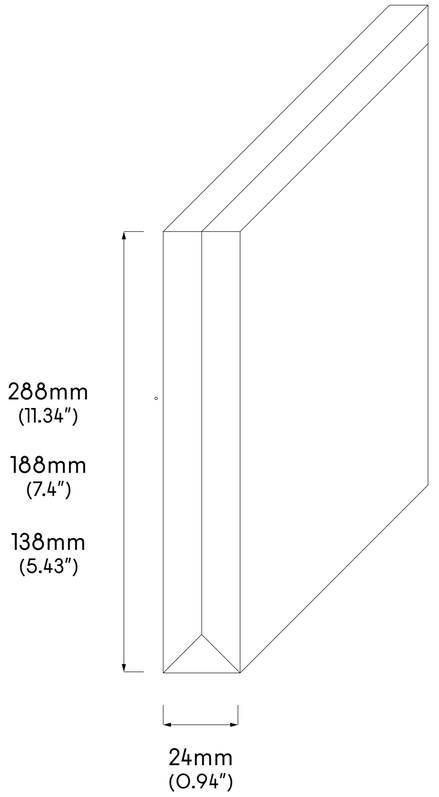

COLORS

echoshape panels are crafted from 12mm PET felt, serving as the core material in our acoustic solutions. Available in a curated range of colors, these panels are designed to enhance both the visual and acoustic qualities of any space.

Choose from subtle neutrals for a seamless look, or introduce bold tones to create striking contrasts. Due to the nature of the PET felt manufacturing process, a soft heathered texture may appear, blending multiple shades within each panel. As a result, slight color variations between units are natural and reflect the sustainable, recycled origin of the material.

Please note: colors may appear differently on screens or in print. For accurate color matching, we recommend requesting a physical sample.

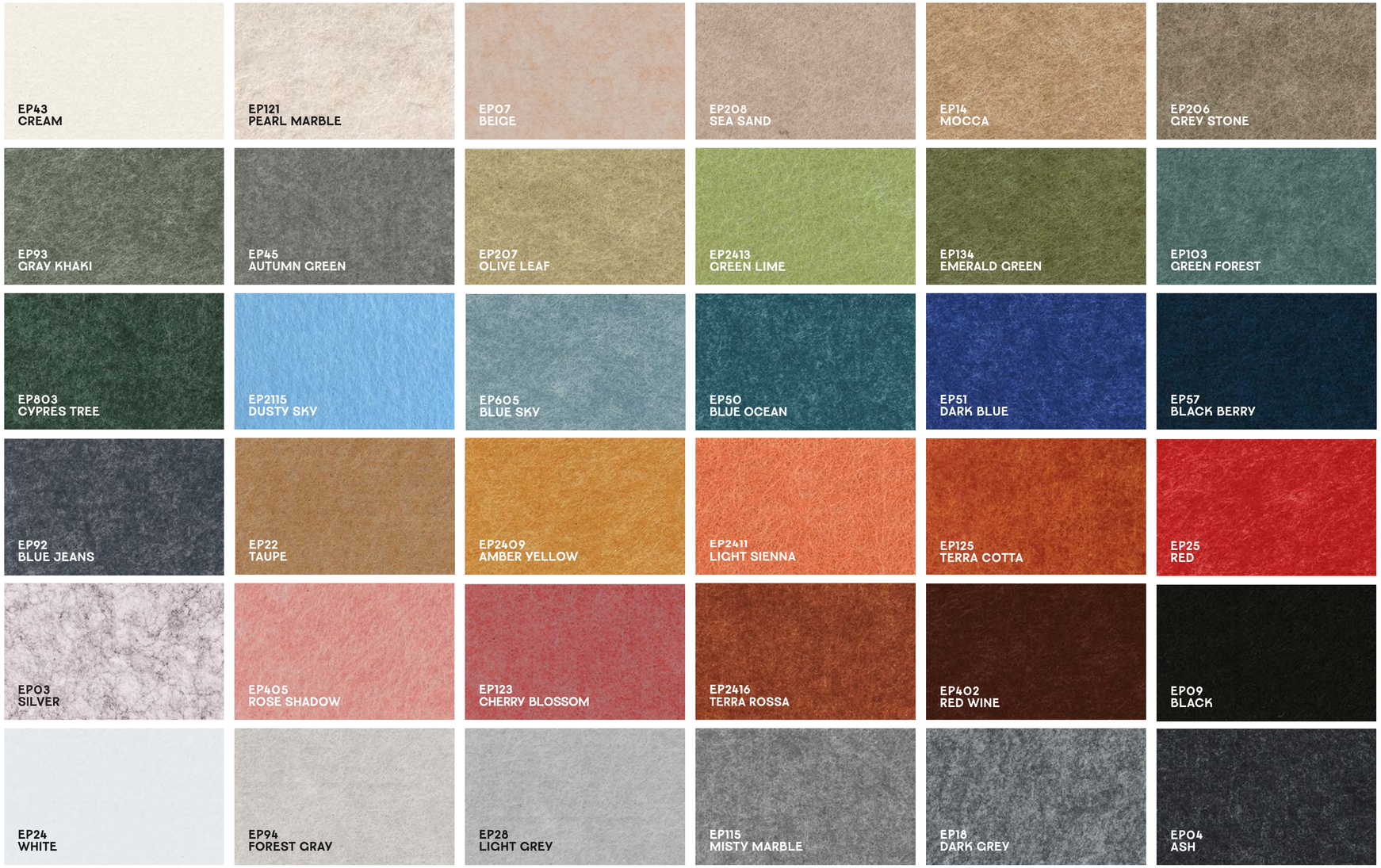

PRINTED PATTERNS

echoshape panels are crafted from 12mm PET felt, serving as the core material in our acoustic solutions. Available in a curated range of colors, these panels are designed to enhance both the visual and acoustic qualities of any space.

Choose from subtle neutrals for a seamless look, or introduce bold tones to create striking contrasts. Due to the nature of the PET felt manufacturing process, a soft heathered texture may appear, blending multiple shades within each panel. As a result, slight color variations between units are natural and reflect the sustainable, recycled origin of the material.

Please note: colors may appear differently on screens or in print. For accurate color matching, we recommend requesting a physical sample.



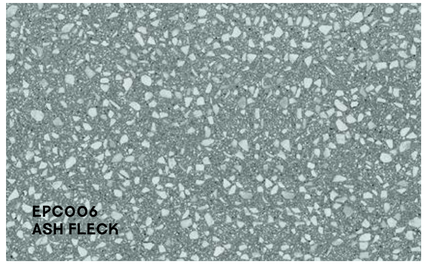

























SPECIFICATIONS

MANUFACTURED FROM	Panels
COMPOSITION	100% Polyester (PET)
SUSTAINABILITY	70% Recycled plastic bottles
APPLICATION	Ceiling Baffles
FIRE RATING	EN13501-1 | B S-1 d0 ASTM E-84 – Class A
LENGTH	2780mm (109.45") | 2400mm (94.49")
THICKNESS	12mm | 24mm TOLERANCE ±7%
INSTALLATION	Uniformed Hanging Free Hanging
ACOUSTIC RESULTS	Measurement results Echoshape mounted at an airgap of 0 mm α_w 0.25 / NRC 0.30 Measurement results Echoshape mounted at an airgap of 50 mm α_w 0.55 / NRC 0.65 Measurement results Echoshape mounted at an airgap of 200 mm α_w 0.85 / NRC 0.80
ACOUSTIC CERTIFICATE	ISO 354:2003 EN ISO 22654: 1997 ASTM C423-17
VOC	According to EN ISO 16000-9 Standard: A+
CARE	Indoor use only. Clean with a damp cloth or vacuum. For spills, blot, immediately use water with a soft cloth, and if needed, mild detergent. Dry while still wet. For stubborn stains, try water first, then mild detergent.

INSTALLATION GUIDE

THESE ARE YOUR PARTS

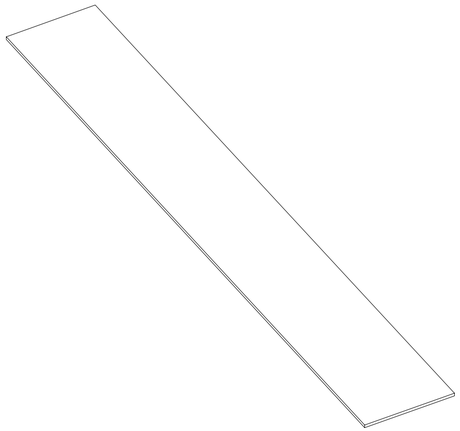

Blade

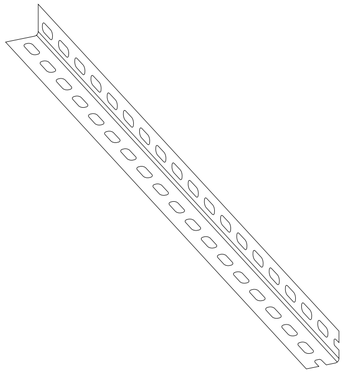

Perforated L - Profile

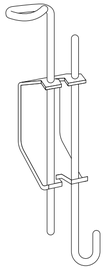

Adjustble Hanger



Dedicated Cable
Hanging Accessory

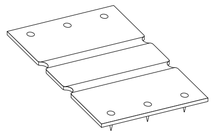

Croc



Screw & Nut

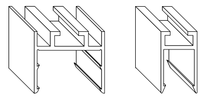

Dedicated U Profile
24mm | 12mm

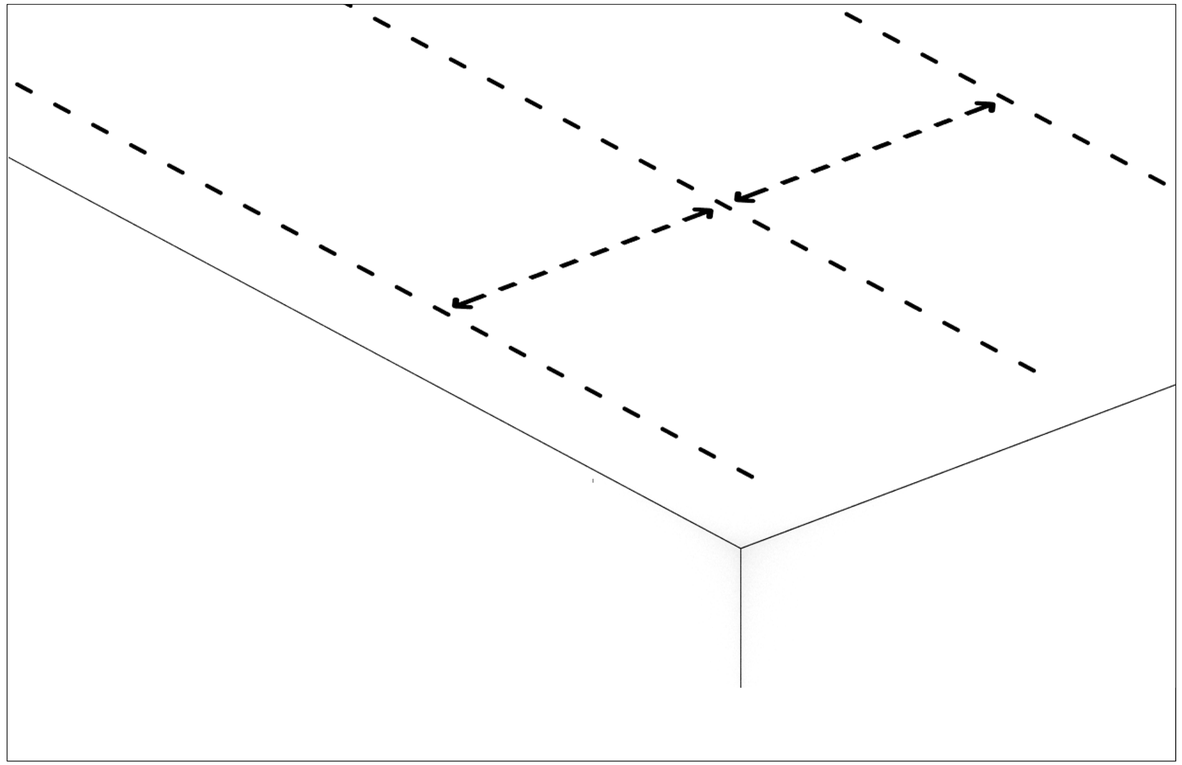

1

Mark the ceiling line on the aboe ceiling . Keep a gap of 80-120cm between hanging rows.

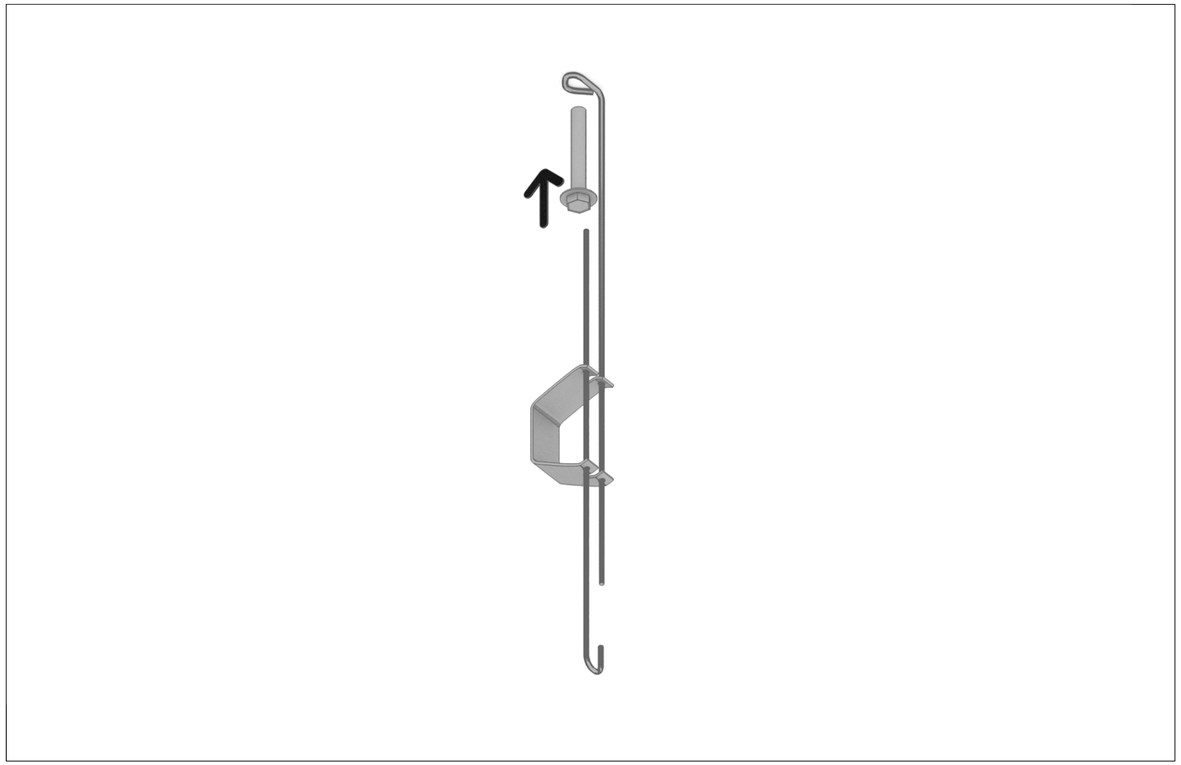

2

Install the adjustable hangers accordingly.

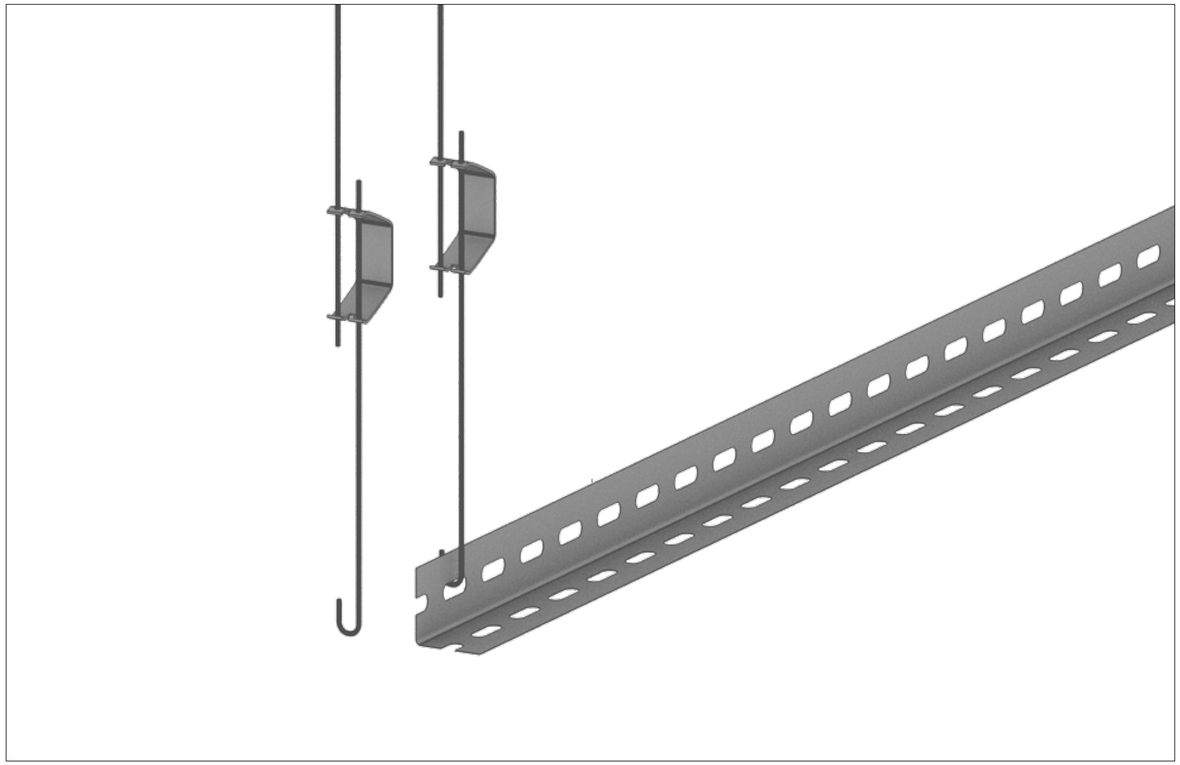

3

Connect the Perfoorated L Profiles to the Adjustable Hangers.

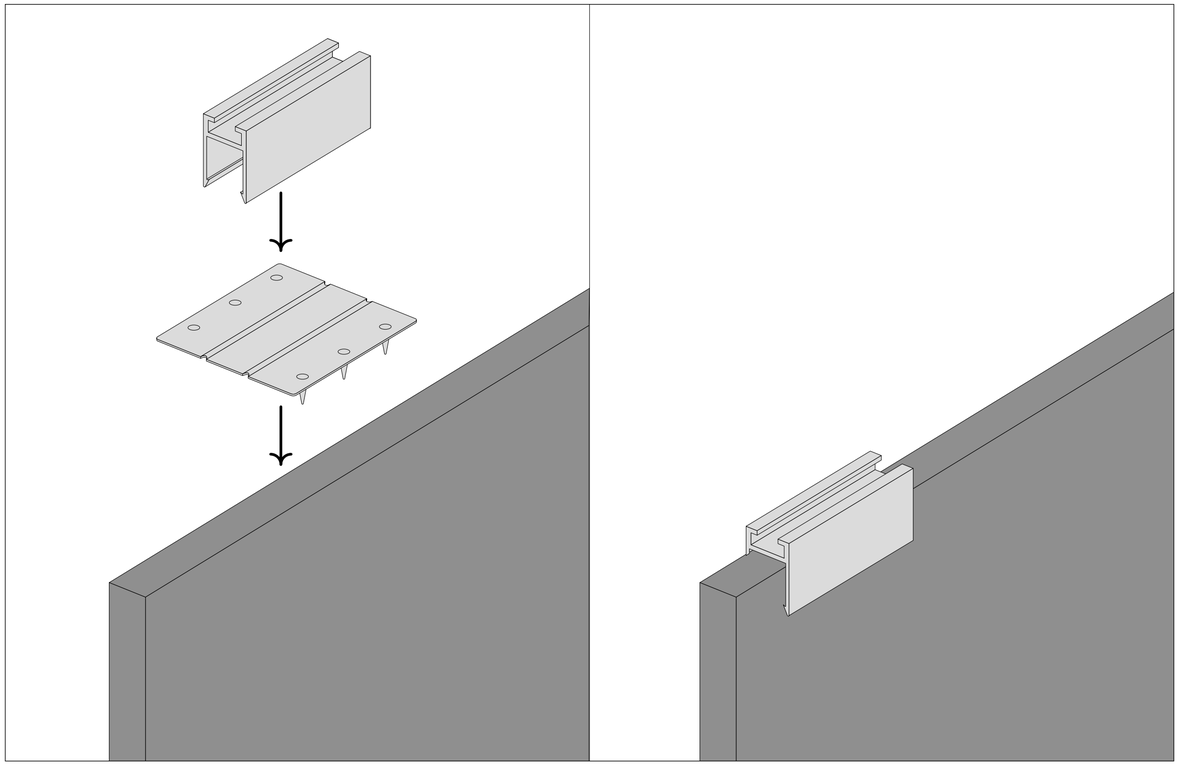

4

Clamp the Croc into the Blade and close the U-Profile on top of it for a secure connection.

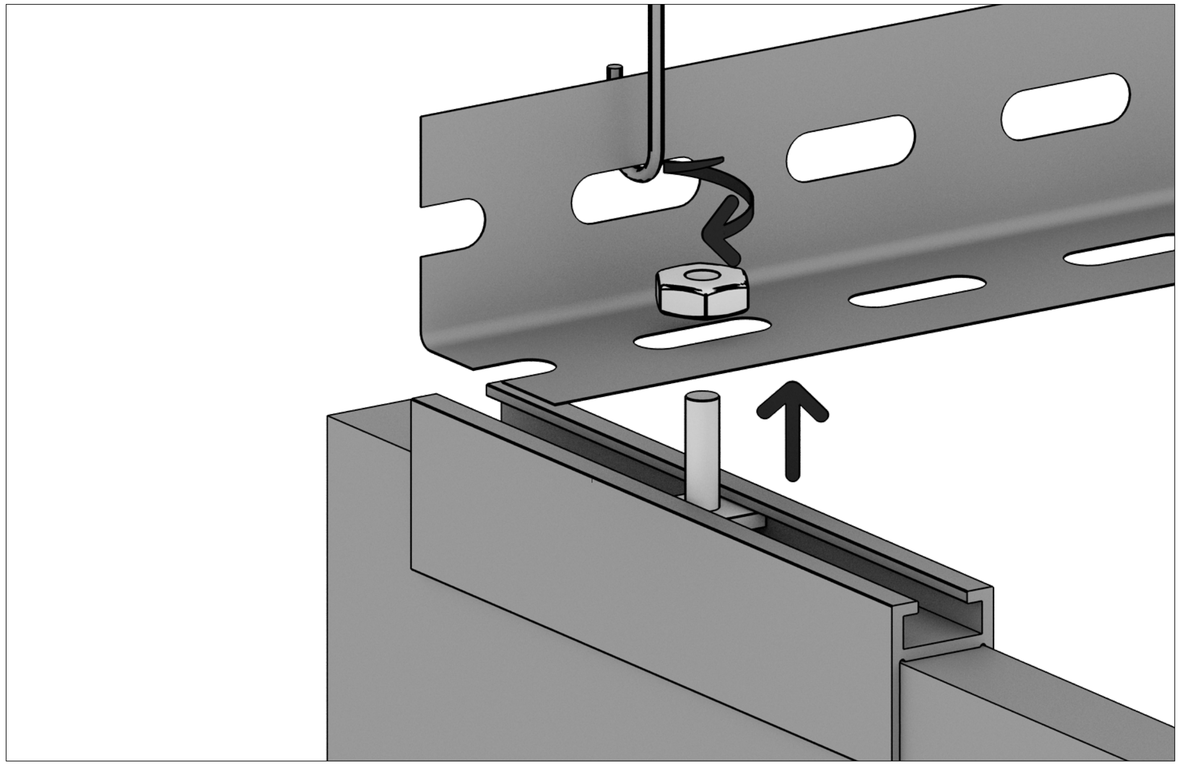

5

Thread the screw into the U profile.

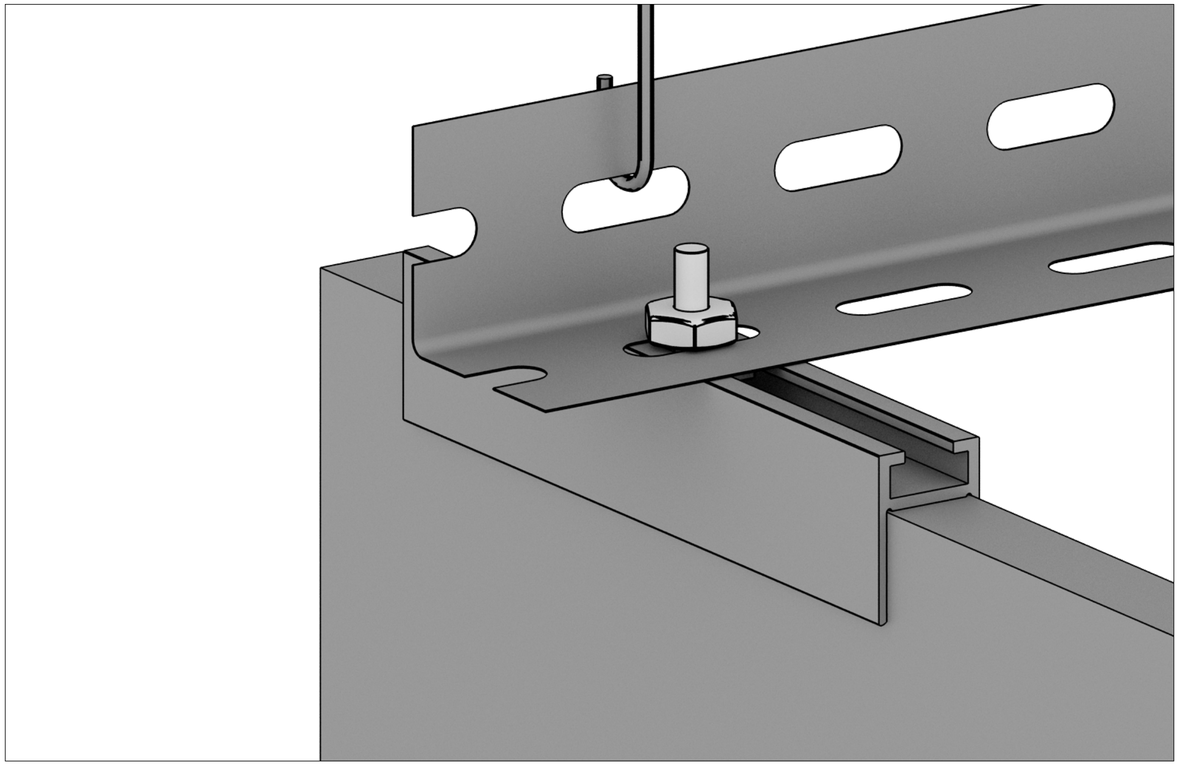

6

Tighten the nut to the screw.

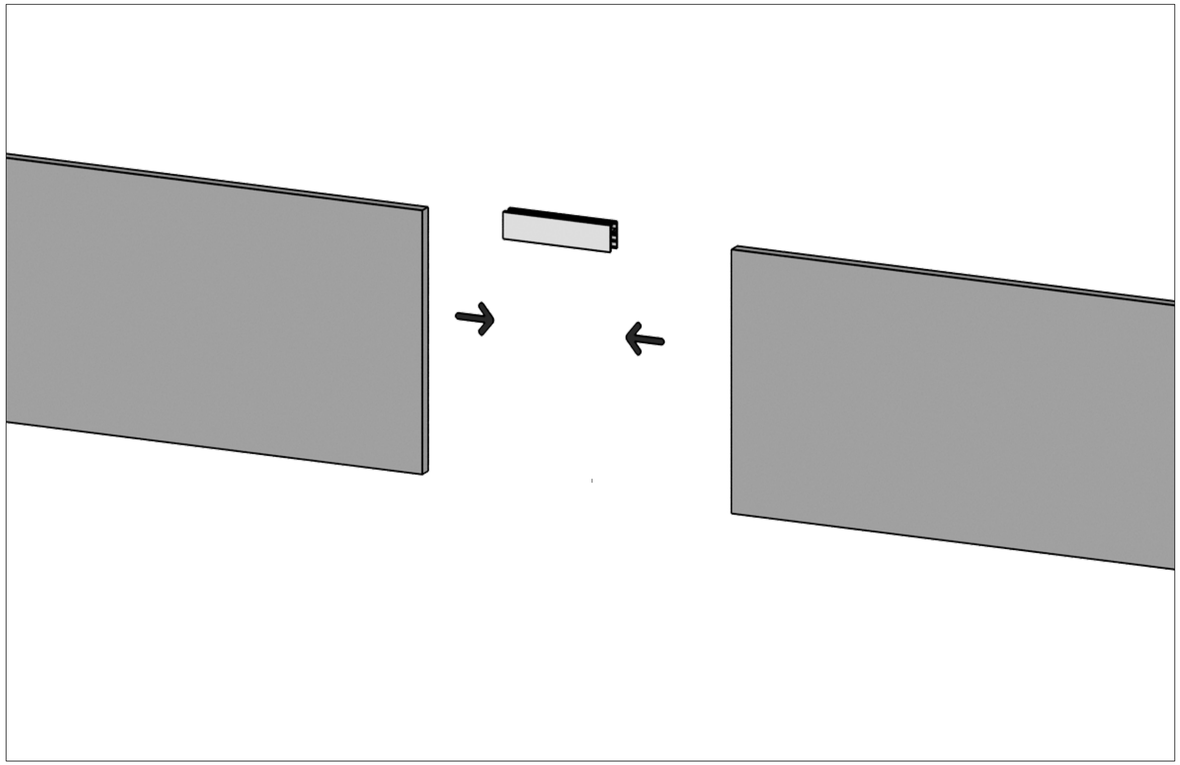

7

When two Blades are aligned - make sure to connect them with a U profile. keep a 5mm detaching distance between two continuous Blades.

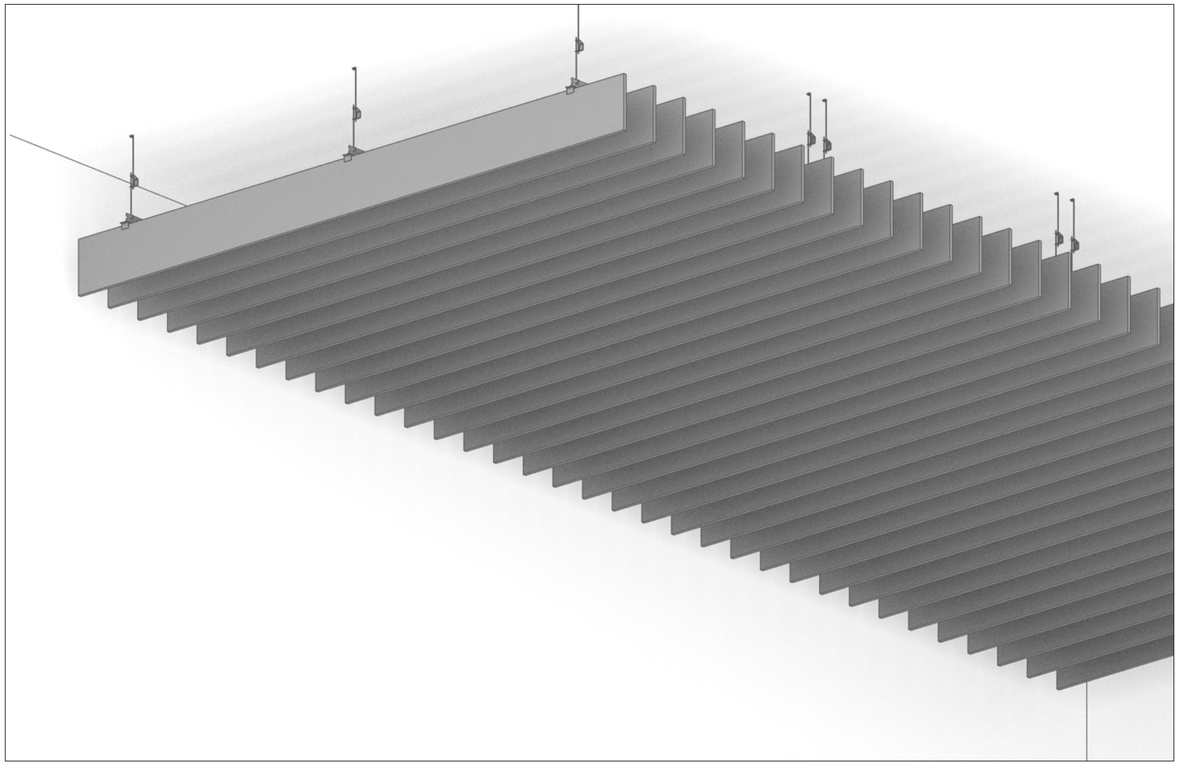

8

Repeat the process for the entire ceiling.

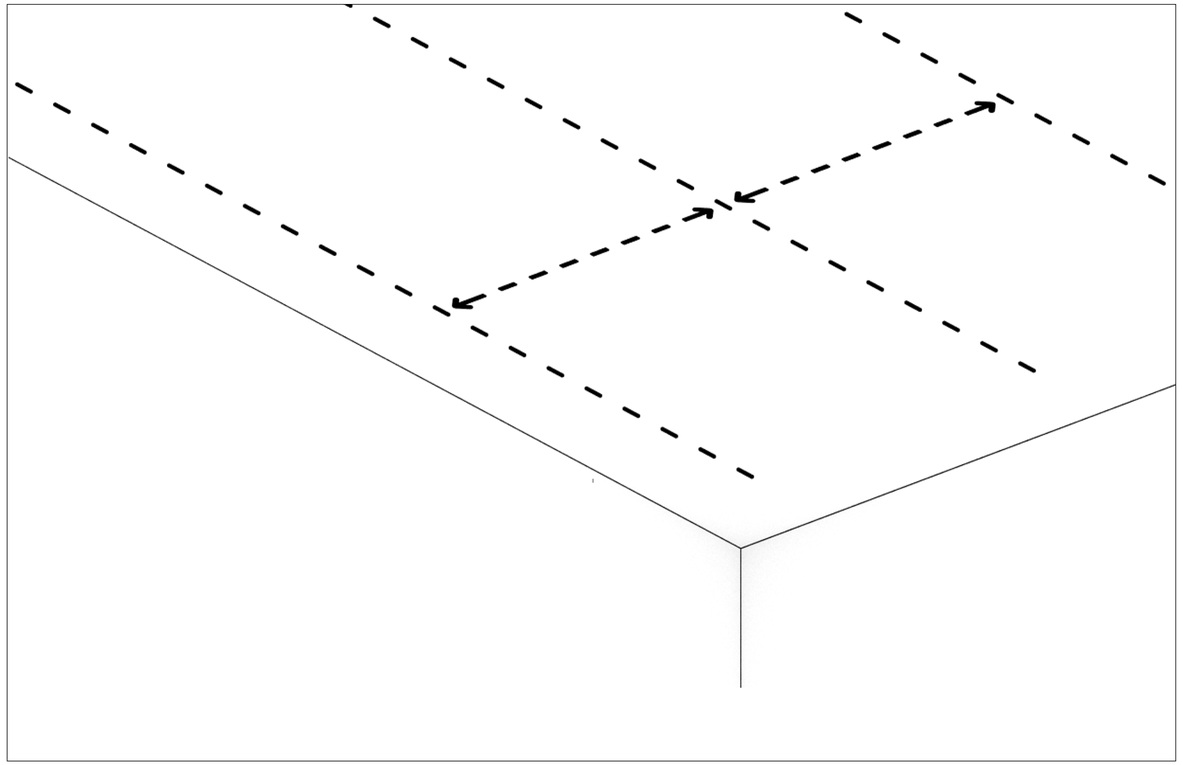

1

Mark the ceiling line on the aboe ceiling . Keep a gap of 80-120cm between hanging rows.

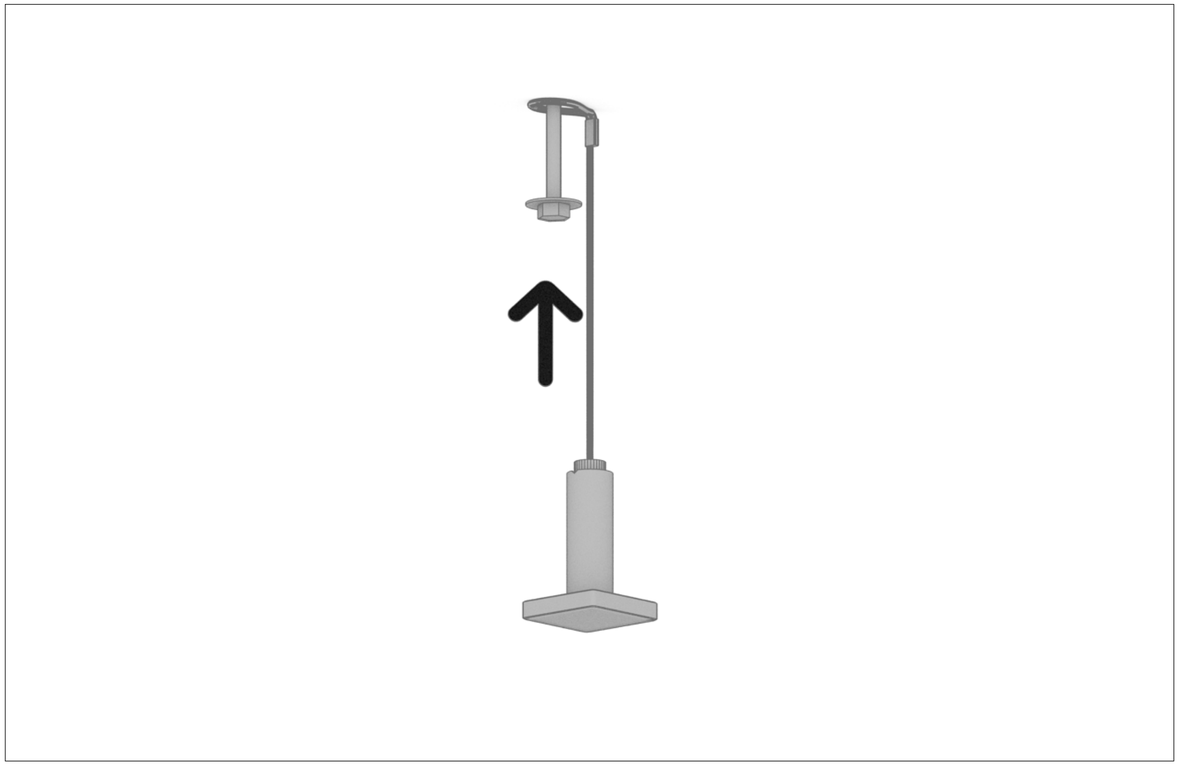

2

Install the Adjustable Hangers accordingly.

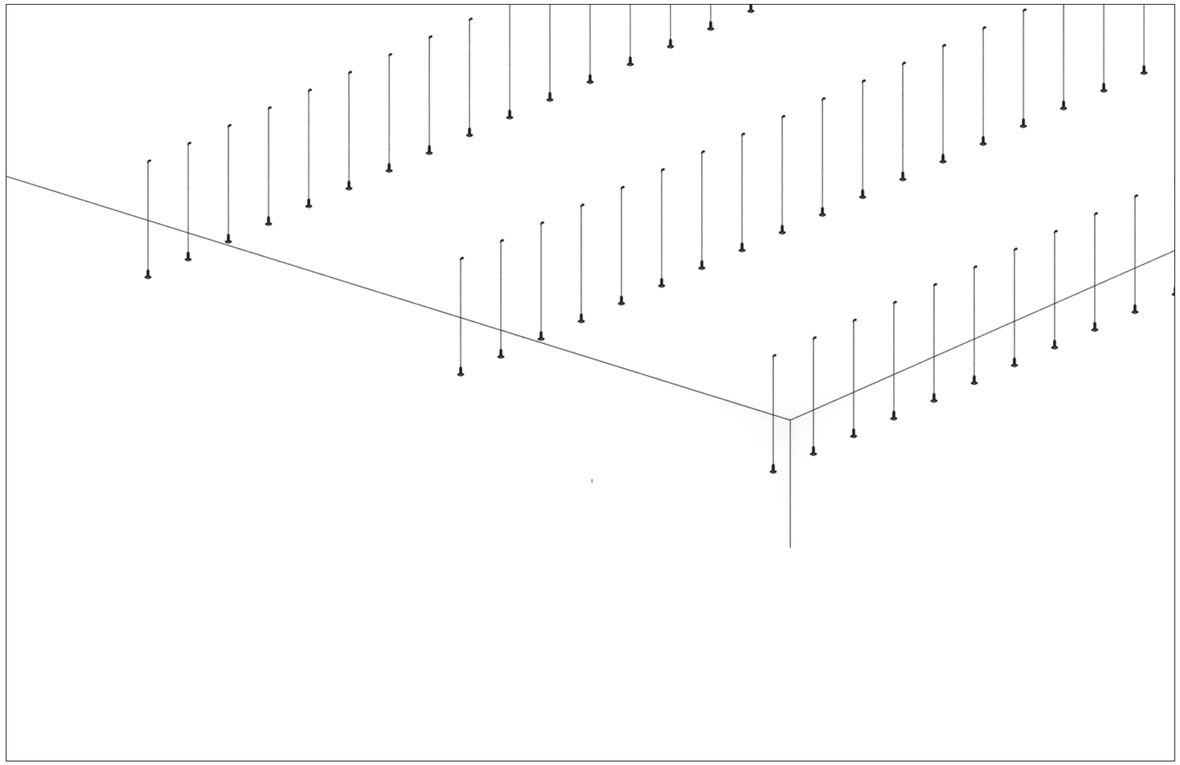

3

Keep the gap at a consistant distance. The distance between hanger should be 150-200mm.

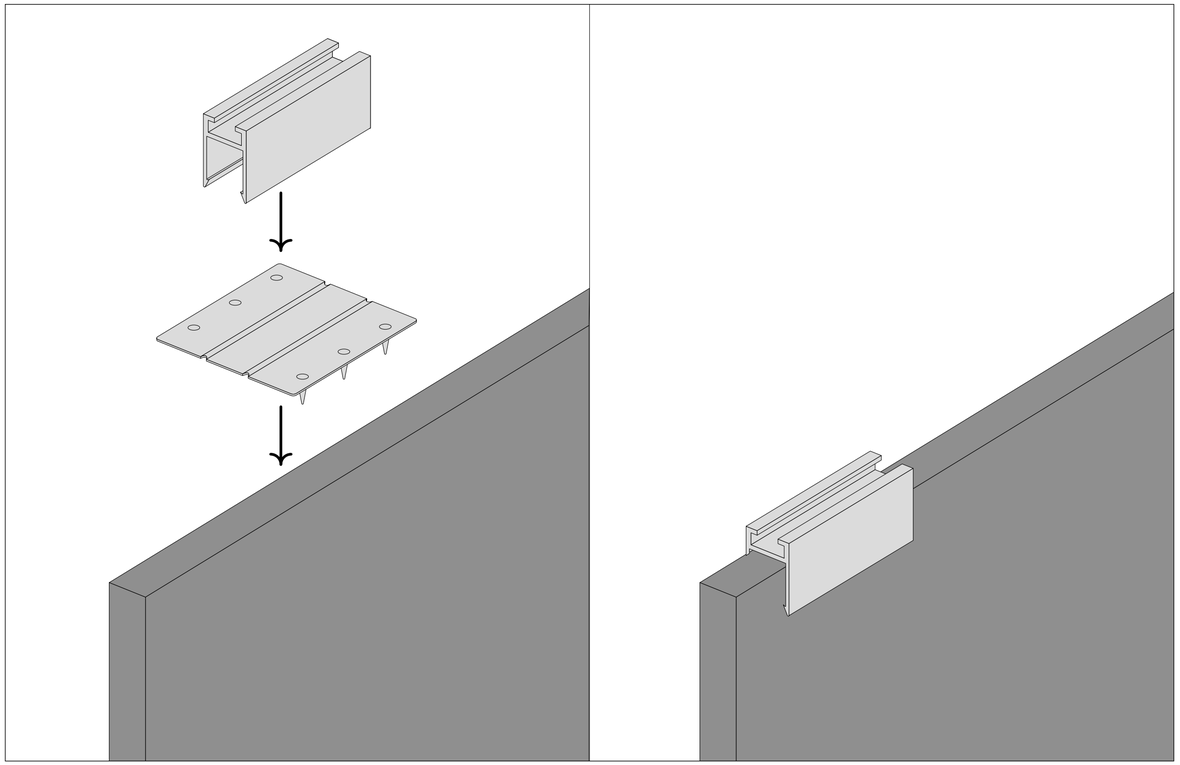

4

Clamp the Croc into the Blade and close the U-Profile on top of it for a secure connection.

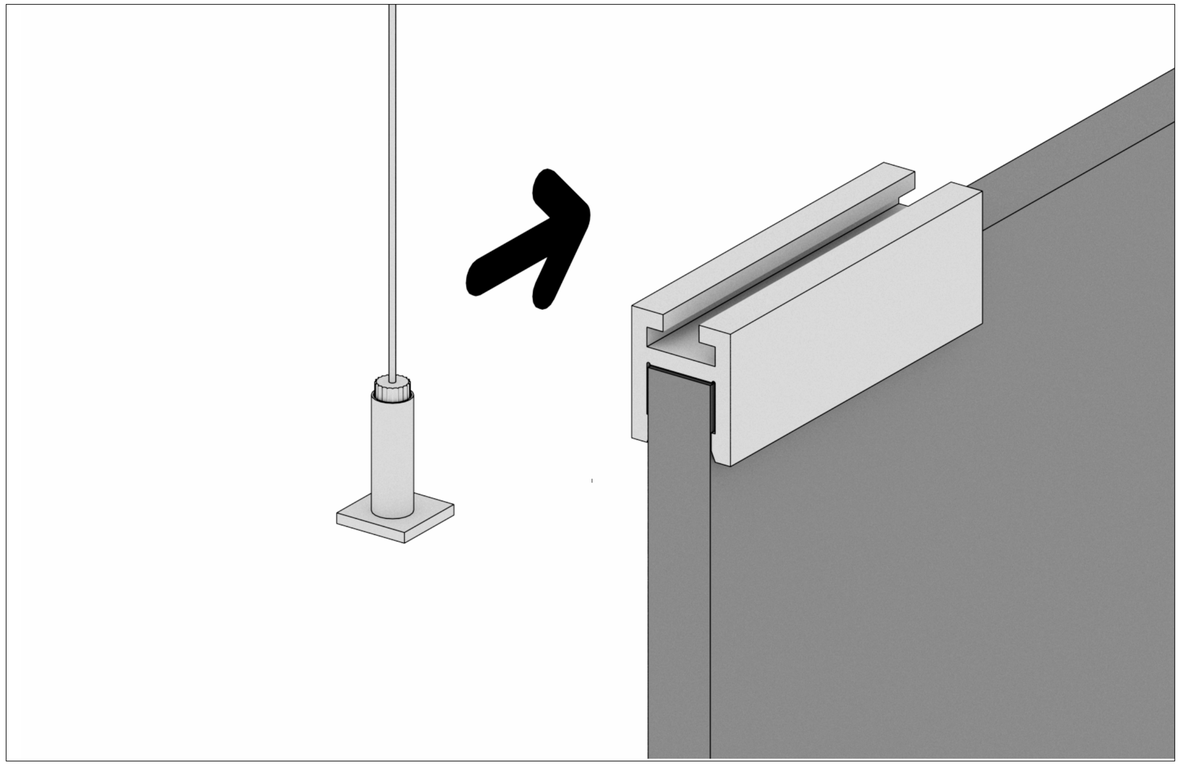

5

Thread the dedicated cable Hanging Accessory into the U Profile.

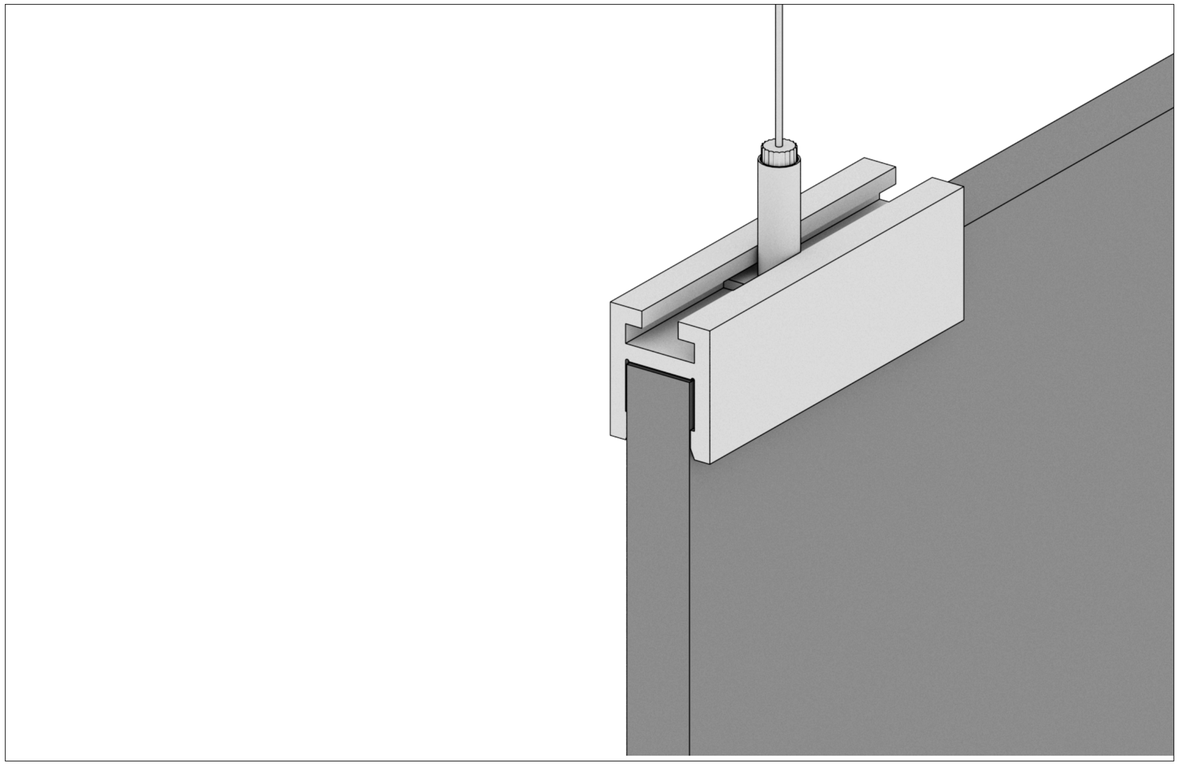

6

Make sure it is properly tightened.

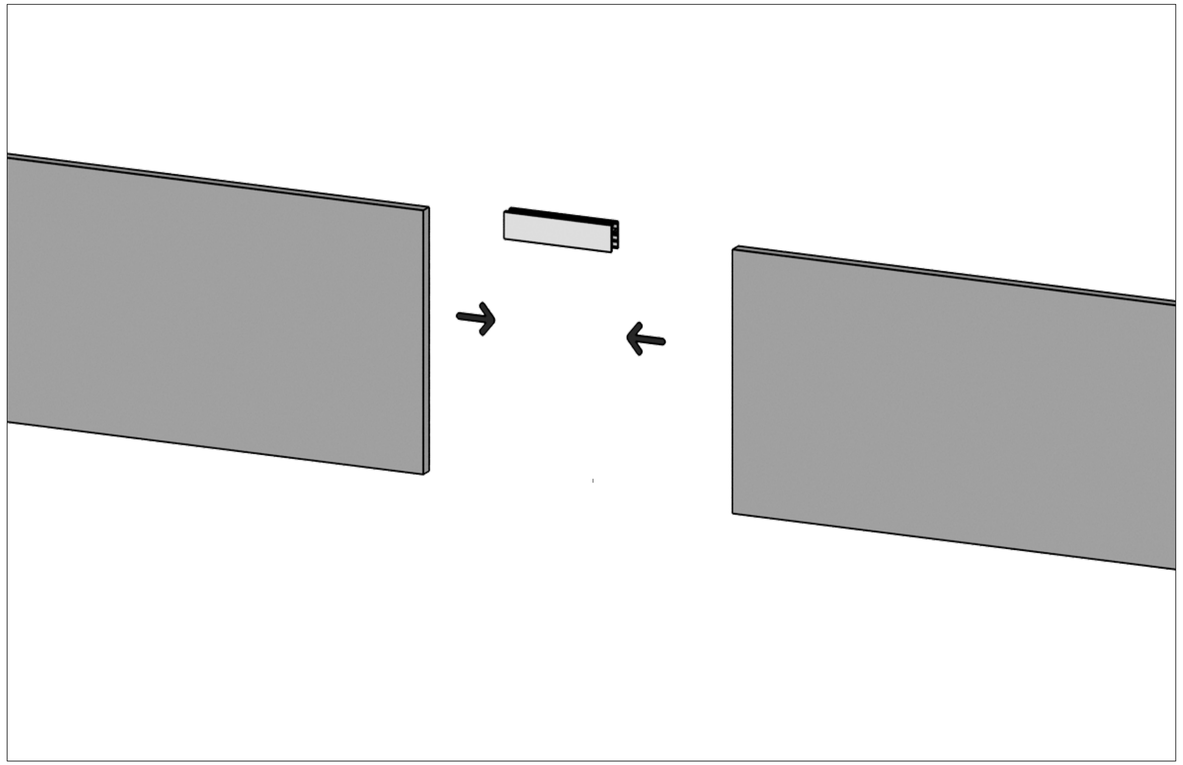

7

When two Blades are aligned - make sure to connect them with a U profile. keep a 5mm detaching distance between two continuous Blades.

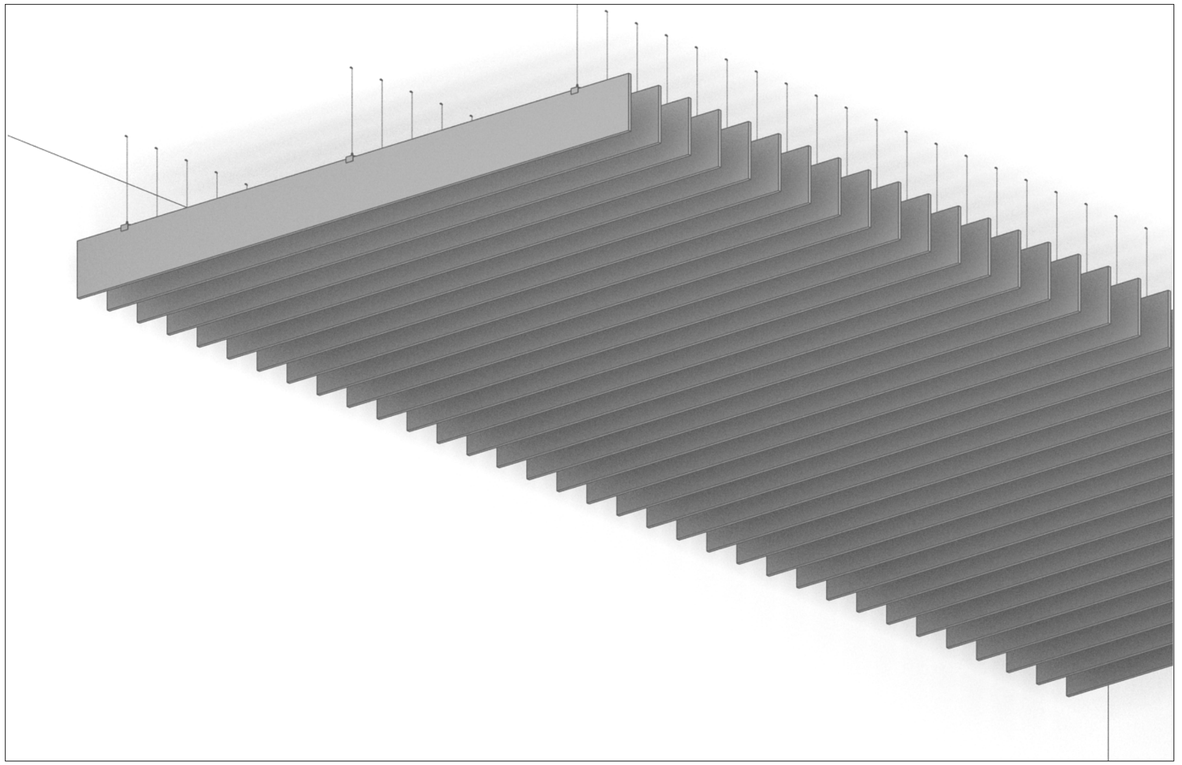

8

Repeat the process for the entire ceiling.